TE
662
.A3
NO.FHWA
-RD-73-
502

No. FHWA-RD-73-502

E RATING AND ANALYSIS STRUCTURAL SYSTEM (DRAGS)

DEPARTMENT OF
TRANSPORTATION
SEP 24 1974
LIBRARY

Vol. II. Example Problems

R. R. Johnston, R. H. Day, and D. A. Glandt

September 1973
Final Report

This document is available to the public through the National Technical Information Service, Springfield, Virginia 22151

Prepared for
FEDERAL HIGHWAY ADMINISTRATION
Offices of Research & Development
Washington, D.C. 20590

NOTICE

This document is disseminated under the sponsorship of the Department of Transportation in the interest of information exchange. The United States Government assumes no liability for its contents or use thereof.

The contents of this report reflect the views of the contracting organization, which is responsible for the facts and the accuracy of the data presented herein. The contents do not necessarily reflect the official views or policy of the Department of Transportation. This report does not constitute a standard, specification, or regulation.

TE
662
.A3
no.
FHWA-
RD-
502

TECHNICAL REPORT STANDARD TITLE PAGE

DEPARTMENT OF TRANSPORTATION
SEP 24 1974
LIBRARY

1. Report No. FHWA-RD-73-502	2. Government Accession No.	3. Recipient's Catalog No.
4. Title and Subtitle Bridge Rating and Analysis Structural System (BRASS) Vol. II. Example Problems		5. Report Date September 1973
		6. Performing Organization Code
7. Author(s) Ralph R. Johnston, Robert H. Day and Dan A. Glandt		8. Performing Organization Report No.
9. Performing Organization Name and Address Wyoming Highway Department P.O. 1708 Cheyenne, Wyoming 82001		10. Work Unit No. FCP 36E1023
		11. Contract or Grant No. FH-11-7936
12. Sponsoring Agency Name and Address U. S. Department of Transportation Federal Highway Administration, Washington, D.C. 20590		13. Type of Report and Period Covered Final report
		14. Sponsoring Agency Code P-0034

15. Supplementary Notes

FHWA's contract manager: Richard Sharp, Region 8 Bridge Engineer, Denver, Col.
FHWA's implementation manager: Webster H. Collins, HDV-21
This is the second volume of a series of three under this same general title.

16. Abstract

State bridge engineers are required by the 1971 National Bridge Inspection Standards to determine the safe load carrying capacity for each highway bridge in his State. In addition, he is required to determine a structural rating for each bridge. This report describes a computerized Bridge Rating and Analysis Structural System (BRASS), developed by the Wyoming Highway Department, which can be used by bridge engineers as a tool in making these determinations.

This report is the second volume in a series of three volumes. The titles of the three volumes are: I, System Reference Manual; II, Example Problems; and III, Programming Aids.

The material in this volume--Example Problems--includes test data for eight typical highway bridge loading analysis and rating problems. In addition, it includes the solutions to these problems. The included test data allows an organization to implement and initially execute the Rating System without extensive data collection and codification. The output examples provide a system checkout and they serve a tutorial function.

17. Key Words Bridge Rating Highway bridge design Highway bridge review Bridge engineering computer programs	18. Distribution Statement Availability unlimited. The public can obtain this document through the National Technical Information Service, Springfield, Virginia, 22151.

19. Security Classif. (of this report)	20. Security Classif. (of this page)	21. No. of Pages	22. Price
Unclassified	Unclassified	303	

Form DOT F 1700.7 (8-69)

4.1 REINFORCED CONCRETE DECK

Sample Problem for a Reinforced Concrete Deck is the rating of a continuous 9" RC slab supported by stringers with 10" wide top flanges spaced 12 feet apart. The deck has identical cantilevers as shown in the typical half section. The rating wheel loads are 16 kips for wheel #1 which is for an HS-20 truck, 9 kips for wheel #2 which is for a Type 3S2 truck of 39.95 tons, and 9 kips for wheel #3 which is for a Type 3 truck of 22 tons. When a deck is rated by itself, it does not work with total truck weights; therefore, the data in the summary sheet concerning truck weights should be ignored.

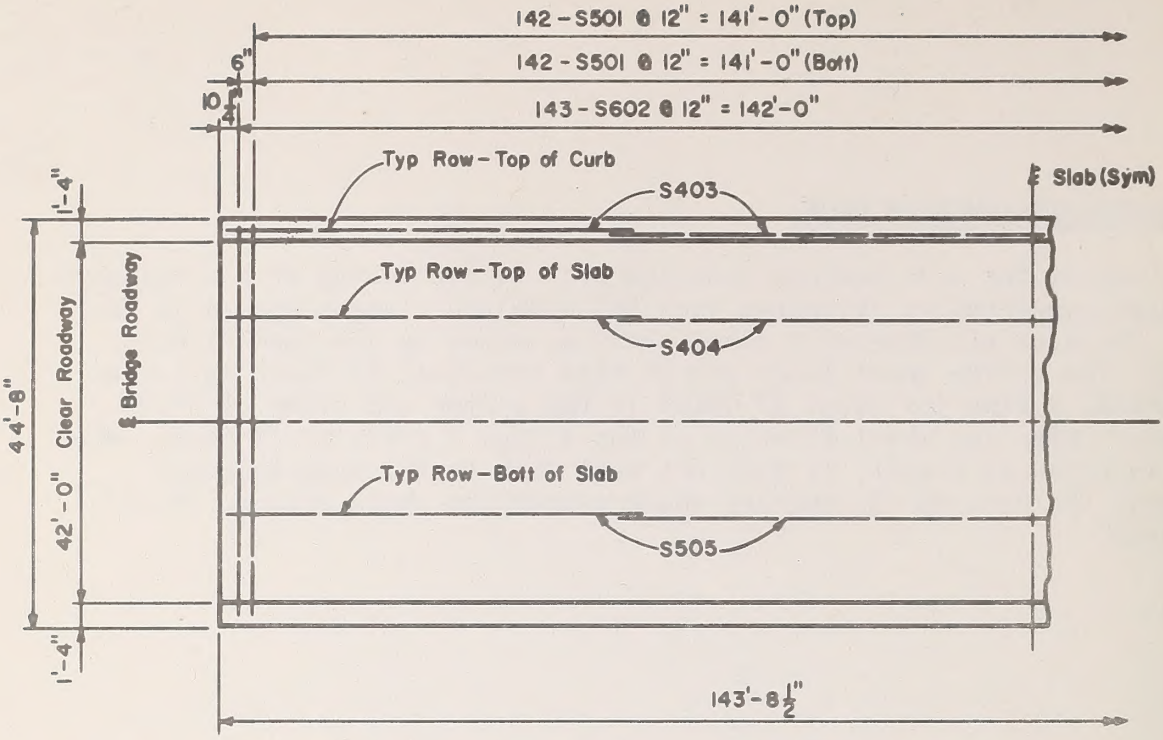

HALF PLAN OF SLAB

BAR NOTATION:
S501 — Indicates Bar Size
Longitudinal steel as per AASHO 1969

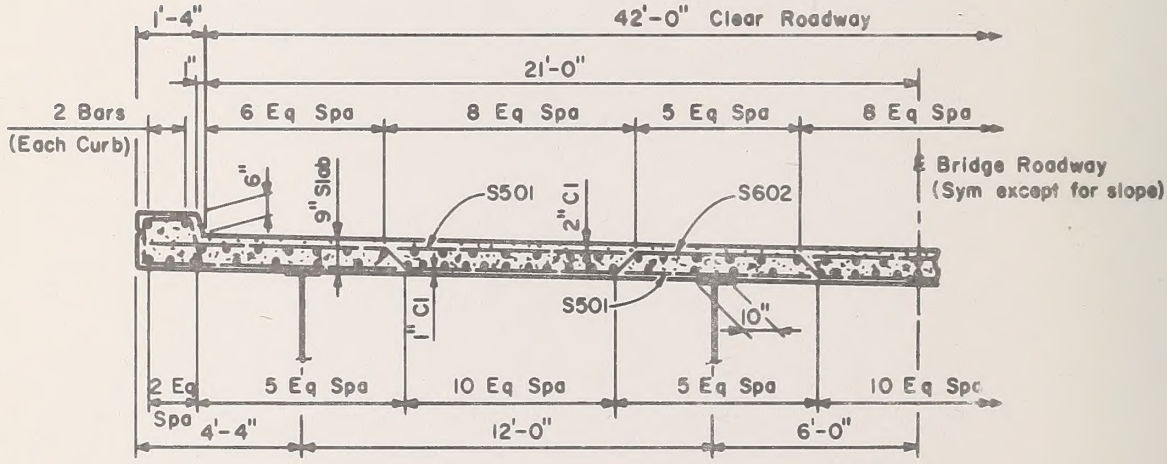

TYPICAL HALF SECTION THRU SLAB

SAMPLE PROBLEM FOR REINFORCED CONCRETE DECK

FORM C-16
Rev. 3/11/69

WYOMING STATE HIGHWAY DEPARTMENT
CHEYENNE WYOMING
BRIDGE DIVISION

DESIGN SYSTEM

SHEET NO 1 OF 1
BY DAG DATE 9-6-73
CHECKED

//EXEC BRSYSØØ

Employee No. 68	Dept. Code	P or D / Job Code 75	Work Code	Str. No.
585770		DXC4		

I COMMENT CARD

1,0,0	SAMPLE PROBLEM FOR REINFORCED CONCRETE DECK

1 2 WORK CODE	3 5 DATA CODE	ENTRY 1 (6–15)	ENTRY 2 (25)	ENTRY 3 (35)	ENTRY 4 (45)	ENTRY 5 (55)	ENTRY 6 (65)	66 CONT
DC	ØØ6	11.	8.	2.	21.		.3	
	Ø11	.31	.75	.75	.31	2.31	1.38	
	Ø12	3250.	60000.	.5	.5	.4	.4	
	Ø13	12.	10.	9.	16.	9.	9.	
	Ø14	35.	150.		2.38	1.31		
	Ø15	4.33		.5833				
	Ø16	9.		9.	6.	1.33		

TRAILER CARD

9,9,9	

1 3

NOTE: A trailer card must follow the last structure card containing data

WYOMING HIGHWAY DEPARTMENT
BRIDGE DESIGN DIVISION

DATE
PAGE NO 1

SAMPLE PROBLEM FOR REINFORCED CONCRETE DECK

585770 DXC4

INPUT AS RECEIVED BY COMPUTER

WORK CODE	DATA CODE	ENTRY 1	ENTRY 2	ENTRY 3	ENTRY 4	ENTRY 5	ENTRY 6	
DC	6	11.00000	8.00000	2.00000	21.00000	0.0	0.30000	
	11	0.31000	0.75000	0.75000	0.31000	2.31000	1.38000	
	12	3250.00000	60000.00000	0.50000	0.50000	0.40000	0.40000	
	13	12.00000	10.00000	9.00000	16.00000	9.00000	9.00000	
	14	35.00000	150.00000	0.0	2.38000	1.31000	0.0	
	15	4.33000	0.0	0.58330	0.0	0.0	0.0	
	16	9.00000	0.0	9.00000	6.00000	1.33000	0.0	
99	900	0.0	0.0	0.0	0.0	0.0	0.0	RC

SAMPLE PROBLEM FOR REINFORCED CONCRETE DECK 585770 DXC4

STRESSES, MOMENTS, AND REQUIRED STEEL AREAS FOR REINFORCED CONCRETE DECK

ALLOWABLE STRESSES FOR INVENTORY RATING-- FS= 24000. PSI FC= 1300. PSI
ALLOWABLE STRESSES FOR OPERATING RATING-- FS= 30000. PSI FC= 1625. PSI

AS1= 0.31 SQ IN C1= 2.31 IN AS2= 0.75 SQ IN C2= 1.38 IN AS3= 0.75 SQ IN C3= 2.38 IN
AS4= 0.31 SQ IN C4= 1.31 IN AS5= 0.0 SQ IN C5= 0.0 IN AS6= 0.0 SQ IN C6= 0.0 IN

FIRST WHEEL LOAD (16.00 KIPS)

	POSITIVE MOMENT REGION IN SPANS	NEGATIVE MOMENT REGION IN SPANS	FIRST CANTILEVER	SECOND CANTILEVER
LIVE LOAD MOMENT=	7.063 K-FT	-7.063 K-FT	-7.190 K-FT	0.0 K-FT
DEAD LOAD MOMENT=	1.509 K-FT	-1.509 K-FT	-1.424 K-FT	0.0 K-FT
FS=	20.331 KSI	23.620 KSI	23.734 KSI	0.0 KSI
FSPRIME=	1.467 KSI	9.148 KSI	9.192 KSI	0.0 KSI
FC=	0.990 KSI	1.153 KSI	1.158 KSI	0.0 KSI
REQUIRED AS(TOP)	0.310 SQ IN/FT	0.750 SQ IN/FT	0.750 SQ IN/FT	0.0 SQ IN/FT
REQUIRED AS(BOT)	0.750 SQ IN/FT	0.310 SQ IN/FT	0.310 SQ IN/FT	0.0 SQ IN/FT

SECOND WHEEL LOAD (9.00 KIPS)

	POSITIVE MOMENT REGION IN SPANS	NEGATIVE MOMENT REGION IN SPANS	FIRST CANTILEVER	SECOND CANTILEVER
LIVE LOAD MOMENT=	3.973 K-FT	-3.973 K-FT	-4.044 K-FT	0.0 K-FT
DEAD LOAD MOMENT=	1.509 K-FT	-1.509 K-FT	-1.424 K-FT	0.0 K-FT
FS=	13.003 KSI	15.106 KSI	15.067 KSI	0.0 KSI
FSPRIME=	0.938 KSI	5.850 KSI	5.835 KSI	0.0 KSI
FC=	0.633 KSI	0.737 KSI	0.735 KSI	0.0 KSI
REQUIRED AS(TOP)	0.310 SQ IN/FT	0.750 SQ IN/FT	0.750 SQ IN/FT	0.0 SQ IN/FT
REQUIRED AS(BOT)	0.750 SQ IN/FT	0.310 SQ IN/FT	0.310 SQ IN/FT	0.0 SQ IN/FT

SAMPLE PROBLEM FOR REINFORCED CONCRETE DECK

585770 DXC4

THIRD WHEEL LOAD (9.00 KIPS)

	POSITIVE MOMENT REGION IN SPANS	NEGATIVE MOMENT REGION IN SPANS	FIRST CANTILEVER	SECOND CANTILEVER
LIVE LOAD MOMENT=	3.973 K-FT	-3.973 K-FT	-4.044 K-FT	0.0 K-FT
DEAD LOAD MOMENT=	1.509 K-FT	-1.509 K-FT	-1.424 K-FT	0.0 K-FT
FS=	13.003 KSI	15.106 KSI	15.067 KSI	0.0 KSI
FSPRIME=	0.938 KSI	5.850 KSI	5.835 KSI	0.0 KSI
FC=	0.633 KSI	0.737 KSI	0.735 KSI	0.0 KSI
REQUIRED AS(TOP)	0.310 SQ IN/FT	0.750 SQ IN/FT	0.750 SQ IN/FT	0.0 SQ IN/FT
REQUIRED AS(BOT)	0.750 SQ IN/FT	0.310 SQ IN/FT	0.310 SQ IN/FT	0.0 SQ IN/FT

NOW CALLING 1BRSYS50

50

WYOMING HIGHWAY DEPARTMENT
BRIDGE DESIGN DIVISION

DATE
PAGE NO 4

SAMPLE PROBLEM FOR REINFORCED CONCRETE DECK

585770 DXC4

INVENTORY RATING FOR CONCRETE DECK (LOAD 1)

	POSITIVE STEEL	NEGATIVE STEEL	CONCRETE FLEXURE	STIRRUPS
POS M.	1.219	10.637	1.380	********
NEG M.	1.013	2.930	1.146	********

OPERATING RATING FOR CONCRETE DECK (LOAD

	POSITIVE STEEL	NEGATIVE STEEL	CONCRETE FLEXURE	STIRRUPS
POS M.	1.577	********	1.779	********
NEG M.	1.316	3.712	1.482	********

INVENTORY RATING FOR CONCRETE DECK (LOAD 2)

	POSITIVE STEEL	NEGATIVE STEEL	CONCRETE FLEXURE	STIRRUPS
POS M.	2.167	********	2.454	********
NEG M.	1.802	5.209	2.038	********

OPERATING RATING FOR CONCRETE DECK (LOAD

	POSITIVE STEEL	NEGATIVE STEEL	CONCRETE FLEXURE	STIRRUPS
POS M.	2.804	********	3.163	********
NEG M.	2.340	6.600	2.636	********

INVENTORY RATING FOR CONCRETE DECK (LOAD 3)

	POSITIVE STEEL	NEGATIVE STEEL	CONCRETE FLEXURE	STIRRUPS
POS M.	2.167	********	2.454	********
NEG M.	1.802	5.209	2.038	********

OPERATING RATING FOR CONCRETE DECK (LOAD

	POSITIVE STEEL	NEGATIVE STEEL	CONCRETE FLEXURE	STIRRUPS
POS M.	2.804	********	3.163	********
NEG M.	2.340	6.600	2.636	********

SAMPLE PROBLEM FOR REINFORCED CONCRETE DECK 585770 DXC4

LOAD RATING SUMMARY SHEET

INVENTORY RATING

CONTROL POINT--SPAN 0 @ 0 TENTH (LOAD 1)

CONCRETE SECTION ; (POSITIVE STEEL)
POSITIVE MOMENT RATING FACTOR = 0.251
LOAD RATING = 0.063 TONS

CONTROL POINT--SPAN 0 @ 0 TENTH (LOAD 2)

CONCRETE SECTION ; (POSITIVE STEEL)
POSITIVE MOMENT RATING FACTOR = 0.251
LOAD RATING = 0.063 TONS

CONTROL POINT--SPAN 0 @ 0 TENTH (LOAD 3)

CONCRETE SECTION ; (POSITIVE STEEL)
POSITIVE MOMENT RATING FACTOR = 0.251
LOAD RATING = 0.063 TONS

SAMPLE PROBLEM FOR REINFORCED CONCRETE DECK 585770 DXC4

LOAD RATING SUMMARY SHEET

OPERATING RATING

CONTROL POINT--SPAN 0 @ 0 TENTH (LOAD 1)

CONCRETE SECTION ; (POSITIVE STEEL)
POSITIVE MOMENT RATING FACTOR = 0.251
LOAD RATING = 0.063 TONS

CONTROL POINT--SPAN 0 @ 0 TENTH (LOAD 2)

CONCRETE SECTION ; (POSITIVE STEEL)
POSITIVE MOMENT RATING FACTOR = 0.251
LOAD RATING = 0.063 TONS

CONTROL POINT--SPAN 0 @ 0 TENTH (LOAD 3)

CONCRETE SECTION ; (POSITIVE STEEL)
POSITIVE MOMENT RATING FACTOR = 0.251
LOAD RATING = 0.063 TONS

TOTAL WEIGHT OF LOAD TYPE 1 = 0.251 TONS
TOTAL WEIGHT OF LOAD TYPE 2 = 0.251 TONS
TOTAL WEIGHT OF LOAD TYPE 3 = 0.251 TONS

NOW CALLING 0 1BPSYS00

4.2 TREATED TIMBER DECK

Sample Problem for a Treated Timber Deck is the rating of a continuous 2" x 4" laminated timber deck supported by 6" x 20" timber stringers. The stringer spacing is 2'-2". The rating load is one 12 kip wheel of an H-15 truck for which the bridge was originally designed. On the Load Rating Summary Sheet data appears concerning truck weights. This information is valid when a deck is rated in conjunction with the stringers which would be the usual case. However, this should be ignored when the deck is run by itself. The load factors are valid for the 12 kip wheel.

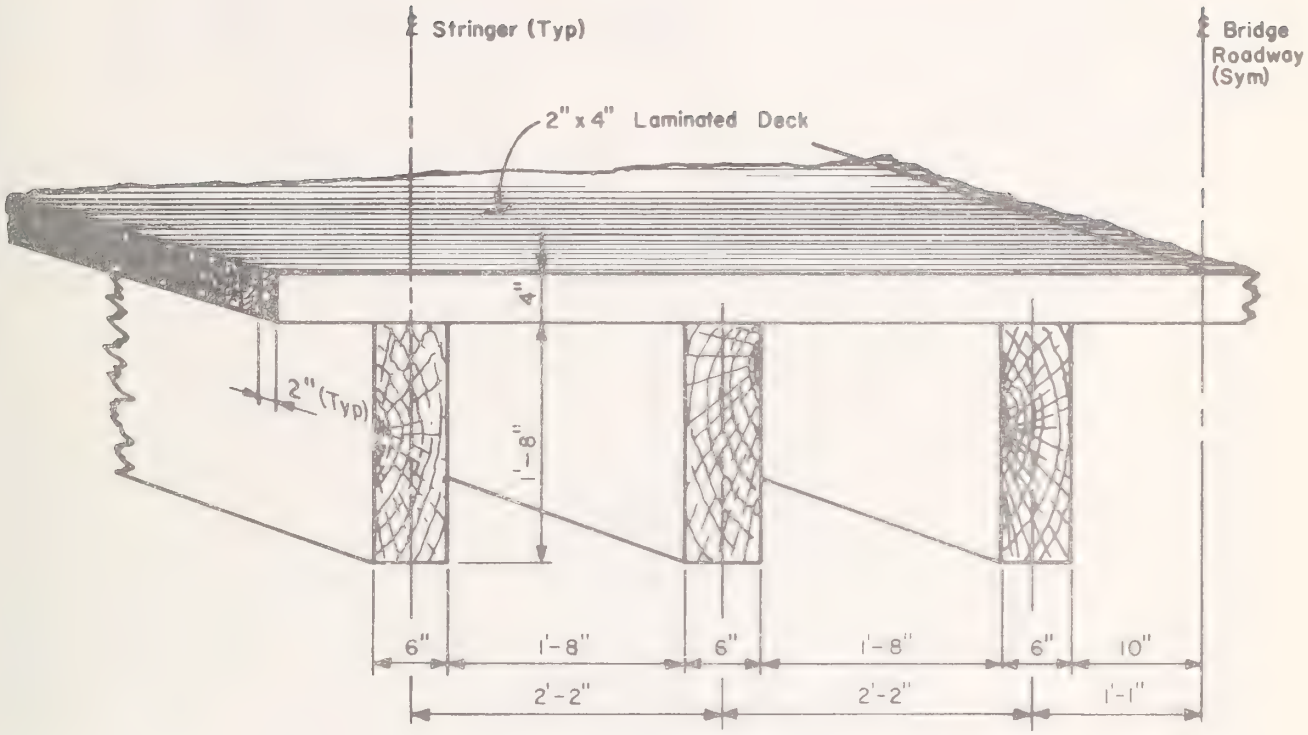

TRANSVERSE SECTION

SAMPLE PROBLEM FOR TREATED TIMBER DECK

FORM C-16
Rev. 3/11/69

WYOMING STATE HIGHWAY DEPARTMENT
CHEYENNE WYOMING
BRIDGE DIVISION

DESIGN SYSTEM

SHEET NO 1 OF 1
BY DAG DATE 9-11-73
CHECKED

//EXEC BRSYSØØ

Employee No. (65–68)	Dept. Code	P or D / Job Code (75)	Work Code	Str. No. (80)
5857	7Ø	DXC4		

1 COMMENT CARD (64)

1ØØ SAMPLE PROBLEM FOR TREATED TIMBER BRIDGE DECK

WORK CODE (1–2)	DATA CODE (3–5)	ENTRY 1 (6–15)	ENTRY 2 (25)	ENTRY 3 (35)	ENTRY 4 (45)	ENTRY 5 (55)	ENTRY 6 (65)	CONT (66)
DC	ØØ6	11.				1.		
	Ø13				12.			
	Ø22	2.17	2.	4.	5Ø.	47.5	6.	
	Ø23	2394.	16Ø.	18ØØ.	12Ø.	1.	2.	
	Ø24		15.		2Ø.		2Ø.	

TRAILER CARD

9 9 9 (1–3)

NOTE: A trailer card must follow the last structure card containing data

WYOMING HIGHWAY DEPARTMENT
BRIDGE DESIGN DIVISION

DATE
PAGE NO 1

SAMPLE PROBLEM FOR TREATED TIMBER BRIDGE

585770 DXC4

INPUT AS RECEIVED BY COMPUTER

WORK CODE	DATA CODE	ENTRY 1	ENTRY 2	ENTRY 3	ENTRY 4	ENTRY 5	ENTRY 6
DC	6	11.00000	0.0	0.0	0.0	1.00000	0.0
	13	0.0	0.0	0.0	12.00000	0.0	0.0
	22	2.17000	2.00000	4.00000	50.00000	47.50000	6.00000
	23	2394.00000	160.00000	1800.00000	120.00000	1.00000	2.00000
	24	0.0	15.00000	0.0	20.00000	0.0	20.00000
99	900	0.0	0.0	0.0	0.0	0.0	0.0

SAMPLE PROBLEM FOR TREATED TIMBER BRIDGE 585770 DXC4

STRESSES, MOMENTS, AND LOAD FACTORS FOR TIMBER DECK

```
ALLOWABLE BENDING STRESS FOR INVENTORY RATING=   1800. PSI
ALLOWABLE BENDING STRESS FOR OPERATING RATING=   2394. PSI
ALLOWABLE HORIZONTAL SHEAR STRESS FOR INVENTORY RATING=    120. PSI
ALLOWABLE HORIZONTAL SHEAR STRESS FOR OPERATING RATING=    160. PSI

WHEEL LOAD NUMBER 1 (  12.00KIPS)

   DEAD LOAD MOMENT=      23.7 IN-LBS                LIVE LOAD MOMENT=   2486.4 IN-LBS
   DEAD LOAD BENDING STRESS=      9. PSI             LIVE LOAD BENDING STRESS=    932. PSI
   DEAD LOAD HORIZONTAL SHEAR STRESS=      1. PSI    LIVE LOAD HORIZONTAL SHEAR STRESS=    127. PSI

   INVENTORY RATING USING BENDING STRESSES= 1.921    INVENTORY RATING USING SHEAR STRESSES= 0.935
   OPERATING RATING USING BENDING STRESSES= 2.558    OPERATING RATING USING SHEAR STRESSES= 1.249
NOW CALLING    1BRSYS50
```

WYOMING HIGHWAY DEPARTMENT
BRIDGE DESIGN DIVISION

DATE
PAGE NO 3

SAMPLE PROBLEM FOR TREATED TIMBER BRIDGE

585770 DXC4

INVENTORY RATING FOR TIMBER DECK (LOAD 1)

	FLEXURE STRESS	HORIZONTAL SHEAR	END BEARING
POS M.	1.921	0.935	********

OPERATING RATING FOR TIMBER DECK (LOAD 1

	FLEXURE STRESS	HORIZONTAL SHEAR	END BEARING
POS M.	2.558	1.249	********

SAMPLE PROBLEM FOR TREATED TIMBER BRIDGE 585770 DXC4

LOAD RATING SUMMARY SHEET

INVENTORY RATING

CONTROL POINT--SPAN 0 @ 0 TENTH (LOAD 1)

CONCRETE SECTION : (POSITIVE STEEL)
POSITIVE MOMENT RATING FACTOR = 0.251
LOAD RATING = 0.063 TONS

CONTROL POINT--SPAN 0 @ 0 TENTH (LOAD 2)

CONCRETE SECTION : (POSITIVE STEEL)
POSITIVE MOMENT RATING FACTOR = 0.251
LOAD RATING = 0.063 TONS

CONTROL POINT--SPAN 0 @ 0 TENTH (LOAD 3)

CONCRETE SECTION : (POSITIVE STEEL)
POSITIVE MOMENT RATING FACTOR = 0.251
LOAD RATING = 0.063 TONS

SAMPLE PROBLEM FOR TREATED TIMBER BRIDGE

585770 DXC4

LOAD RATING SUMMARY SHEET

OPERATING RATING

CONTROL POINT--SPAN 0 @ 0 TENTH (LOAD 1)

CONCRETE SECTION : (POSITIVE STEEL)
POSITIVE MOMENT RATING FACTOR = 0.251
LOAD RATING = 0.063 TONS

CONTROL POINT--SPAN 0 @ 0 TENTH (LOAD 2)

CONCRETE SECTION : (POSITIVE STEEL)
POSITIVE MOMENT RATING FACTOR = 0.251
LOAD RATING = 0.063 TONS

CONTROL POINT--SPAN 0 @ 0 TENTH (LOAD 3)

CONCRETE SECTION : (POSITIVE STEEL)
POSITIVE MOMENT RATING FACTOR = 0.251
LOAD RATING = 0.063 TONS

TOTAL WEIGHT OF LOAD TYPE 1 = 0.251 TONS
TOTAL WEIGHT OF LOAD TYPE 2 = 0.251 TONS
TOTAL WEIGHT OF LOAD TYPE 3 = 0.251 TONS

0
NOW CALLING 1BRSYS00

4.3 REINFORCED CONCRETE T-GIRDER

Sample Problem #1 is the design of a 3 span integral leg reinforced concrete T-Girder bridge. The bottom of the T's form a parabolic haunch at the intermediate supports. The top flange width is 105 inches as per AASHO for effective concrete flange width, and the web thickness is 18 inches. The output includes moment influence lines, shear influence lines, and reaction influence lines for those design points requested and at supports. The design loads are HS-20-44, truck and lane, and alternate.

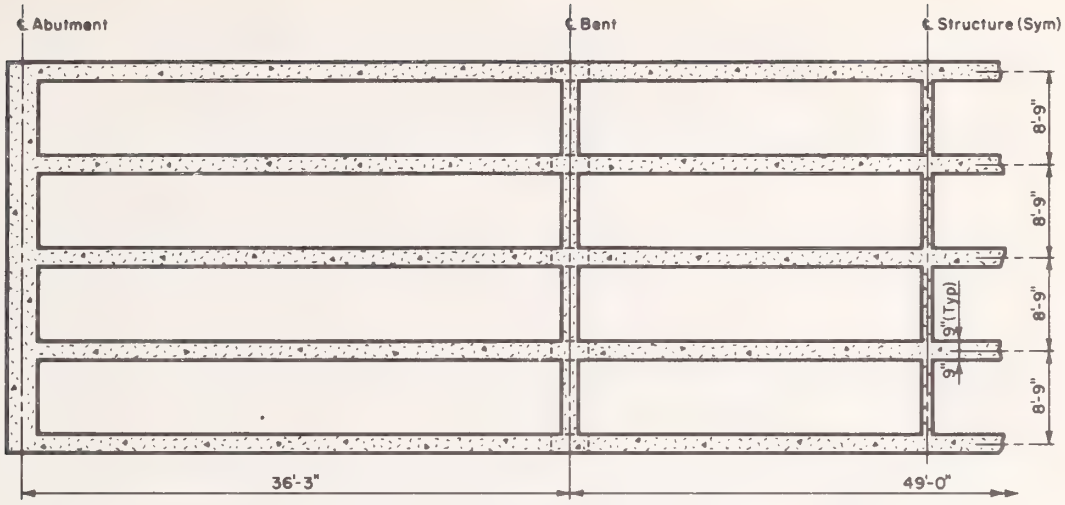

HALF GIRDER PLAN

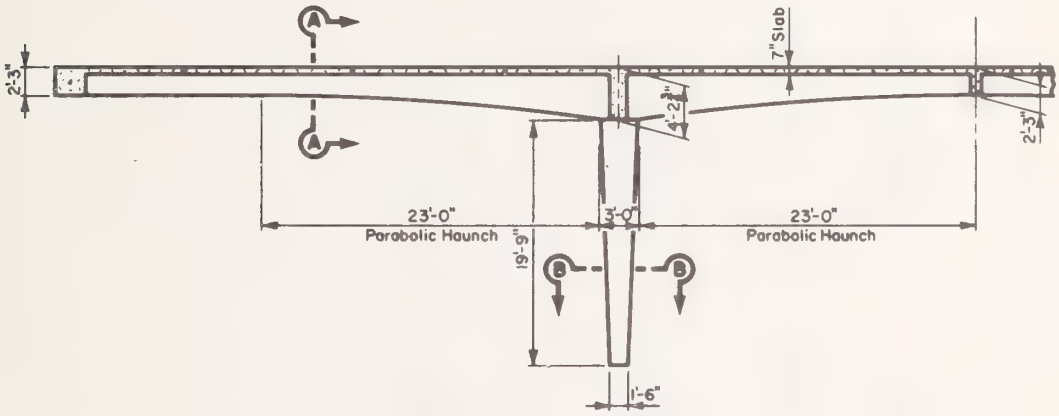

HALF ELEVATION

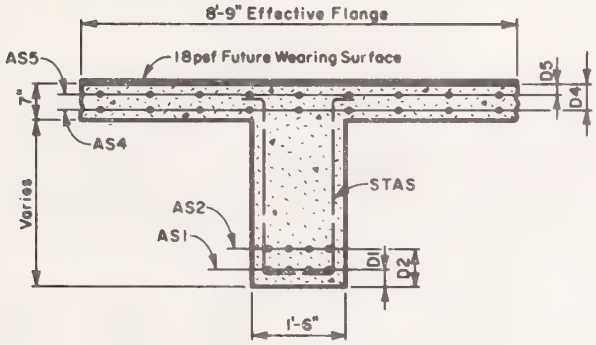

SECTION A-A

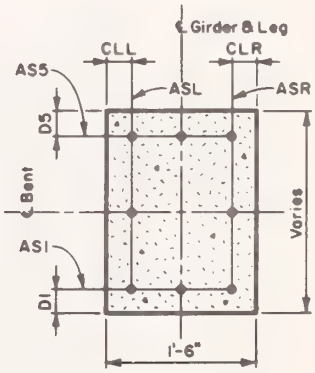

SECTION B-B
(Looking Ahead Station)

SAMPLE PROBLEM NO. 1 - REINFORCED CONCRETE T-GIRDER BRIDGE

FORM C-16
Rev. 3/11/69

WYOMING STATE HIGHWAY DEPARTMENT
CHEYENNE WYOMING
BRIDGE DIVISION

DESIGN SYSTEM

SHEET NO 1 OF 4
BY DAG DATE 9-27-73
CHECKED

//EXEC BRSYSØØ

Employee No. 68	Dept. Code	P or Job D / Code 75	Work Code	Str. No.
7430	70	PEKR9	DES	

I COMMENT CARD

1ØØ	SAMPLE PROBLEM NO. 1 CONCRETE T GIRDER BRIDGE

1 2 WORK CODE	3 5 DATA CODE	ENTRY 1 (6–15)	ENTRY 2 (25)	ENTRY 3 (35)	ENTRY 4 (45)	ENTRY 5 (55)	ENTRY 6 (65)	66 CONT
DC	ØØ6	11.	9.	3.	2Ø.		.3	
	11	.31	.75	.62	.44	1.81	1.37	
	12	3ØØØ.	4ØØØØ.	.75	.55	.5	.4	
	13	8.75	18.	7.	16.	12.		
	14		15Ø.	18.	1.81	1.37		
DC	ØØ1	11111.	5.	2.				
	1ØØ	1ØØ.	1Ø4.	11Ø.	2ØØ.	2Ø5.	8ØØ.	
	1ØØ	81Ø.						
	1Ø1	1.	36.25		11.75	3.	2Ø.	
	1Ø2	43.75	2Ø.					
	1Ø3	36.25	1.					
	1Ø1	2.	49.	24.5	24.5	3.	43.75	
	1Ø2	43.75	2Ø.					
	1Ø3	49.	1.					
	1Ø1	3.	36.25	24.5	36.25	3.	43.75	
	1Ø2	2Ø.	2Ø.					

TRAILER CARD

999	

NOTE: A trailer card must follow the last structure card containing data

FORM C-16
Rev. 3/11/69

WYOMING STATE HIGHWAY DEPARTMENT
CHEYENNE WYOMING
BRIDGE DIVISION

SHEET NO 2 OF 4
BY DAG DATE 9-27-73
CHECKED

//EXEC BRSYSØØ

DESIGN SYSTEM

Employee No. 68	Dept. Code	P or/Job D / Code 75	Work Code	Str. No.

65 80 64

1 COMMENT CARD

1	2	3	5	6–15	25	35	45	55	65	66
WORK	CODE	DATA	CODE	ENTRY 1	ENTRY 2	ENTRY 3	ENTRY 4	ENTRY 5	ENTRY 6	CONT
		1Ø3		36.25	1.					
		1Ø1		8.	23.4	23.4		1.	36.	
		1Ø2		18.						
		1Ø3		23.4	2.					
		1Ø1		9.	23.4	23.4		1.	36.	
		1Ø2		18.						
		1Ø3		23.4	2.					
		111		1.	18.		1Ø5.	7.		
		111		2.	18.					
DC		ØØ2		Ø1111.	1.4583	1ØØ.	36.	24.		
		2Ø1			.15	32ØØ.				
		2Ø2		.1575	1.	3.				
		3Ø1		13.	4.	14.	16.	14.	16.	
		3Ø2		3Ø.						
		3Ø1		23.	12.	4.	12.			
		3Ø9		.32	9.	13.				

TRAILER CARD

1 3

NOTE: A trailer card must follow the last structure card containing data

FORM C-16
Rev. 3/11/69

WYOMING STATE HIGHWAY DEPARTMENT
CHEYENNE WYOMING
BRIDGE DIVISION

SHEET NO 3 OF 4
BY DAG DATE 9-27-73
CHECKED

//EXEC BRSYSØØ

DESIGN SYSTEM

Employee No. 68	Dept. Code	P or D	Job Code 75	Work Code	Str. No.

1 COMMENT CARD

1 2	3 5							66
WORK CODE	DATA CODE	ENTRY 1 (6–15)	ENTRY 2 (25)	ENTRY 3 (35)	ENTRY 4 (45)	ENTRY 5 (55)	ENTRY 6 (65)	CONT
DC	ØØ5	11.	1.					
	5Ø1	.5	.5	.4				
	5Ø2	.75	.75	.55				
	51Ø	1.	3.	2.	3.			
	55Ø	1ØØ.	4ØØØØ.	4ØØØØ.	3ØØØ.	1ØØ.	1Ø.	1
	552	6.24	3.	6.24	7.			1
	553			2.48	2.	.4	12.	
	55Ø	1Ø4.	4ØØØØ.	4ØØØØ.	3ØØØ.	1ØØ.	1Ø.	1
	552	6.24	3.	6.24	7.			1
	553			2.48	2.	.4	12.	
	55Ø	11Ø.	4ØØØØ.	4ØØØØ.	3ØØØ.	1ØØ.	1Ø.	1
	552	3.12	3.					1
	553			13.43	2.	.4	1Ø.	
	55Ø	2ØØ.	4ØØØØ.	4ØØØØ.	3ØØØ.	1ØØ.	1Ø.	1
	552	3.12	3.					1
	553			13.43	2.	.4	1Ø.	
	55Ø	2Ø5.	4ØØØØ.	4ØØØØ.	3ØØØ.	1ØØ.	1Ø.	1

TRAILER CARD

1 3

NOTE: A trailer card must follow the last structure card containing data

FORM C-16
Rev. 3/11/69

WYOMING STATE HIGHWAY DEPARTMENT
CHEYENNE WYOMING
BRIDGE DIVISION

DESIGN SYSTEM

SHEET NO. 4 OF 4
BY DAG DATE 9-27-73
CHECKED

Employee No. 68	Dept. Code	P or D	Job Code 75	Work Code	Str. No.

//EXEC BRSYSØØ

1 COMMENT CARD

1 2 WORK CODE	3 5 DATA CODE	ENTRY 1 (6–15)	ENTRY 2 (25)	ENTRY 3 (35)	ENTRY 4 (45)	ENTRY 5 (55)	ENTRY 6 (65)	66 CONT
	552	6.24	3.	6.24	7.			1
	553			2.48	2.	.4	12.	
	55Ø	8ØØ.	4ØØØØ.	4ØØØØ.	3ØØØ.	1ØØ.	1Ø.	1
	552	2.37	3.					1
	553			2.37	3.	.4	12.	1
	554	2.37	3.	2.37	3.	1.		
	55Ø	81Ø.	4ØØØØ.	4ØØØØ.	3ØØØ.	1ØØ.	1Ø.	1
	552	2.37	3.					1
	553			2.37	3.	.4	12.	1
	554	2.37	3.	2.37	3.	1.		

TRAILER CARD

999
1 3

NOTE: A trailer card must follow the last structure card containing data

WYOMING HIGHWAY DEPARTMENT
BRIDGE DESIGN DIVISION

DATE
PAGE NO 1

SAMPLE PROBLEM NO. 1 CONCRETE T GIRDER BRIDGE 740370PEKR9DES

INPUT AS RECEIVED BY COMPUTER

WORK CODE	DATA CODE	ENTRY 1	ENTRY 2	ENTRY 3	ENTRY 4	ENTRY 5	ENTRY 6	
DC	6	11.00000	9.00000	3.00000	20.00000	0.0	0.30000	
	11	0.31000	0.75000	0.62000	0.44000	1.81000	1.37000	
	12	3000.00000	40000.00000	0.75000	0.55000	0.50000	0.40000	
	13	8.75000	18.00000	7.00000	16.00000	12.00000	0.0	
	14	0.0	150.00000	18.00000	1.81000	1.37000	0.0	
DC	1	11111.00000	5.00000	2.00000	0.0	0.0	0.0	RCSC

SAMPLE PROBLEM NO. 1 CONCRETE T GIRDER BRIDGE 740370PEKR9DES

STRESSES, MOMENTS, AND REQUIRED STEEL AREAS FOR REINFORCED CONCRETE DECK

ALLOWABLE STRESSES FOR INVENTORY RATING-- FS= 20000. PSI FC= 1200. PSI
ALLOWABLE STRESSES FOR OPERATING RATING-- FS= 30000. PSI FC= 1650. PSI

AS1= 0.31 SQ IN C1= 1.81 IN AS2= 0.75 SQ IN C2= 1.37 IN AS3= 0.62 SQ IN C3= 1.81 IN
AS4= 0.44 SQ IN C4= 1.37 IN AS5= 0.0 SQ IN C5= 0.0 IN AS6= 0.0 SQ IN C6= 0.0 IN

FIRST WHEEL LOAD (16.00 KIPS)

	POSITIVE MOMENT REGION IN SPANS	NEGATIVE MOMENT REGION IN SPANS	FIRST CANTILEVER	SECOND CANTILEVER
LIVE LOAD MOMENT=	4.810 K-FT	-4.810 K-FT	0.0 K-FT	0.0 K-FT
DEAD LOAD MOMENT=	0.555 K-FT	-0.555 K-FT	0.0 K-FT	0.0 K-FT
FS=	17.574 KSI	23.107 KSI	0.0 KSI	0.0 KSI
FSPRIME=	2.417 KSI	5.011 KSI	0.0 KSI	0.0 KSI
FC=	1.011 KSI	1.169 KSI	0.0 KSI	0.0 KSI
REQUIRED AS(TOP)	0.310 SQ IN/FT	0.620 SQ IN/FT	0.0 SQ IN/FT	0.0 SQ IN/FT
REQUIRED AS(BOT)	0.750 SQ IN/FT	0.440 SQ IN/FT	0.0 SQ IN/FT	0.0 SQ IN/FT

SECOND WHEEL LOAD (12.00 KIPS)

	POSITIVE MOMENT REGION IN SPANS	NEGATIVE MOMENT REGION IN SPANS	FIRST CANTILEVER	SECOND CANTILEVER
LIVE LOAD MOMENT=	3.607 K-FT	-3.607 K-FT	0.0 K-FT	0.0 K-FT
DEAD LOAD MOMENT=	0.555 K-FT	-0.555 K-FT	0.0 K-FT	0.0 K-FT
FS=	13.635 KSI	17.927 KSI	0.0 KSI	0.0 KSI
FSPRIME=	1.876 KSI	3.888 KSI	0.0 KSI	0.0 KSI
FC=	0.784 KSI	0.907 KSI	0.0 KSI	0.0 KSI
REQUIRED AS(TOP)	0.310 SQ IN/FT	0.620 SQ IN/FT	0.0 SQ IN/FT	0.0 SQ IN/FT
REQUIRED AS(BOT)	0.750 SQ IN/FT	0.440 SQ IN/FT	0.0 SQ IN/FT	0.0 SQ IN/FT

SAMPLE PROBLEM NO. 1 CONCRETE T GIRDER BRIDGE 740370PEKR9DES

THIRD WHEEL LOAD (0.0 KIPS)

	POSITIVE MOMENT REGION IN SPANS		NEGATIVE MOMENT REGION IN SPANS		FIRST CANTILEVER		SECOND CANTILEVER	
LIVE LOAD MOMENT=	0.0	K-FT	0.0	K-FT	0.0	K-FT	0.0	K-FT
DEAD LOAD MOMENT=	0.0	K-FT	0.0	K-FT	0.0	K-FT	0.0	K-FT
FS=	0.0	KSI	0.0	KSI	0.0	KSI	0.0	KSI
FSPRIME=	0.0	KSI	0.0	KSI	0.0	KSI	0.0	KSI
FC=	0.0	KSI	0.0	KSI	0.0	KSI	0.0	KSI
REQUIRED AS(TOP)	0.0	SQ IN/FT	0.0	SQ IN/FT	0.0	SQ IN/FT	0.0	SQ IN/FT
REQUIRED AS(BOT)	0.0	SQ IN/FT	0.0	SQ IN/FT	0.0	SQ IN/FT	0.0	SQ IN/FT

NOW CALLING 1BRSYS00

WYOMING HIGHWAY DEPARTMENT
BRIDGE DESIGN DIVISION

DATE
PAGE NO. 4

SAMPLE PROBLEM NO. 1 CONCRETE T GIRDER BRIDGE 740370PEKR9DES
INPUT AS RECEIVED BY COMPUTER

WORK CODE	DATA CODE	ENTRY 1	ENTRY 2	ENTRY 3	ENTRY 4	ENTRY 5	ENTRY 6
DC	1	11111.00000	5.00000	2.00000	0.0	0.0	0.0
	100	100.00000	104.00000	110.00000	200.00000	205.00000	800.00000
	100	810.00000	0.0	0.0	0.0	0.0	0.0
	101	1.00000	36.25000	0.0	11.75000	3.00000	20.00000
	102	43.75000	20.00000	0.0	0.0	0.0	0.0
	103	36.25000	1.00000	0.0	0.0	0.0	0.0
	101	2.00000	49.00000	24.50000	24.50000	3.00000	43.75000
	102	43.75000	20.00000	0.0	0.0	0.0	0.0
	103	49.00000	1.00000	0.0	0.0	0.0	0.0
	101	3.00000	36.25000	24.50000	36.25000	3.00000	43.75000
	102	20.00000	20.00000	0.0	0.0	0.0	0.0
	103	36.25000	1.00000	0.0	0.0	0.0	0.0
	101	8.00000	23.39999	23.39999	0.0	1.00000	36.00000
	102	18.00000	0.0	0.0	0.0	0.0	0.0
	103	23.39999	2.00000	0.0	0.0	0.0	0.0
	101	9.00000	23.39999	23.39999	0.0	1.00000	36.00000
	102	18.00000	0.0	0.0	0.0	0.0	0.0
	103	23.39999	2.00000	0.0	0.0	0.0	0.0
	111	1.00000	18.00000	0.0	105.00000	7.00000	0.0
	111	2.00000	18.00000	0.0	0.0	0.0	0.0

SAMPLE PROBLEM NO. 1 CONCRETE T GIRDER BRIDGE 740370PEKR9DES

BEAM PROPERTIES PARABOLIC DEPTH VARIATION.

SPAN NO. 1 SPAN LENGTH = 36.250 SPAN RATIO = 1.000

POINT	BEAM DEPTH	XSECT AREA	MOMENTS OF INERTIA	DIST TO CENT(X)	WIDTH OF WEB	FLANGE THICKNESS TOP	FLANGE THICKNESS BOT	FLANGE WIDTH TOP	FLANGE WIDTH BOT
1.00	20.00	1095.0	59041.	19.1	18.000	7.000	0.0	105.00	0.0
1.05	20.00	1095.0	59041.	19.1	18.000	7.000	0.0	105.00	0.0
1.10	20.00	1095.0	59041.	19.1	18.000	7.000	0.0	105.00	0.0
1.15	20.00	1095.0	59041.	19.1	18.000	7.000	0.0	105.00	0.0
1.20	20.00	1095.0	59041.	19.1	18.000	7.000	0.0	105.00	0.0
1.25	20.00	1095.0	59041.	19.1	18.000	7.000	0.0	105.00	0.0
1.30	20.00	1095.0	59041.	19.1	18.000	7.000	0.0	105.00	0.0
1.35	20.03	1095.6	59269.	19.1	18.000	7.000	0.0	105.00	0.0
1.40	20.30	1100.4	61019.	19.3	18.000	7.000	0.0	105.00	0.0
1.45	20.82	1109.8	64589.	19.6	18.000	7.000	0.0	105.00	0.0
1.50	21.61	1123.9	70176.	20.2	18.000	7.000	0.0	105.00	0.0
1.55	22.65	1142.7	78084.	20.9	18.000	7.000	0.0	105.00	0.0
1.60	23.96	1166.2	88736.	21.7	18.000	7.000	0.0	105.00	0.0
1.65	25.52	1194.4	102680.	22.8	18.000	7.000	0.0	105.00	0.0
1.70	27.35	1227.2	120607.	24.0	18.000	7.000	0.0	105.00	0.0
1.75	29.43	1264.7	143372.	25.3	18.000	7.000	0.0	105.00	0.0
1.80	31.77	1306.9	172006.	26.8	18.000	7.000	0.0	105.00	0.0
1.85	34.38	1353.8	207743.	28.4	18.000	7.000	0.0	105.00	0.0
1.90	37.24	1405.4	252039.	30.2	18.000	7.000	0.0	105.00	0.0
1.95	40.37	1461.6	306598.	32.1	18.000	7.000	0.0	105.00	0.0
2.00	43.75	1522.5	373400.	34.1	18.000	7.000	0.0	105.00	0.0

	FIXED END MOMENTS FAC	FCA
1.10	-0.0775	0.0179
1.20	-0.1160	0.0621
1.30	-0.1243	0.1183
1.40	-0.1113	0.1723
1.50	-0.0862	0.2106
1.60	-0.0579	0.2235
1.70	-0.0327	0.2069
1.80	-0.0142	0.1616
1.90	-0.0034	0.0911

STIFFNESS KAC= 4.7894 KCA= 10.2386

CARRY OVERS CAC= 0.8477 CCA= 0.3965

SAMPLE PROBLEM NO. 1 CONCRETE T GIRDER BRIDGE 740370PEKRODES

BEAM PROPERTIES PARABOLIC DEPTH VARIATION.

SPAN NO. 2 SPAN LENGTH = 49.000 SPAN RATIO = 1.352

POINT	BEAM DEPTH	XSECT AREA	MOMENTS OF INERTIA	DIST TO CENT(X)	WIDTH OF WEB	FLANGE THICKNESS TOP	FLANGE THICKNESS BOT	FLANGE WIDTH TOP	FLANGE WIDTH BOT
2.00	43.75	1522.5	373401.	34.1	18.000	7.000	0.0	105.00	0.0
2.05	39.24	1441.3	286120.	31.4	18.000	7.000	0.0	105.00	0.0
2.10	35.20	1368.6	219914.	28.9	18.000	7.000	0.0	105.00	0.0
2.15	31.64	1304.5	170254.	26.7	18.000	7.000	0.0	105.00	0.0
2.20	28.55	1248.9	133464.	24.7	18.000	7.000	0.0	105.00	0.0
2.25	25.94	1201.9	106613.	23.0	18.000	7.000	0.0	105.00	0.0
2.30	23.80	1163.4	87410.	21.6	18.000	7.000	0.0	105.00	0.0
2.35	22.14	1133.5	74118.	20.5	18.000	7.000	0.0	105.00	0.0
2.40	20.95	1112.1	65468.	19.7	18.000	7.000	0.0	105.00	0.0
2.45	20.24	1099.3	60607.	19.2	18.000	7.000	0.0	105.00	0.0
2.50	20.00	1095.0	59041.	19.1	18.000	7.000	0.0	105.00	0.0
2.55	20.24	1099.3	60607.	19.2	18.000	7.000	0.0	105.00	0.0
2.60	20.95	1112.1	65468.	19.7	18.000	7.000	0.0	105.00	0.0
2.65	22.14	1133.5	74118.	20.5	18.000	7.000	0.0	105.00	0.0
2.70	23.80	1163.4	87410.	21.6	18.000	7.000	0.0	105.00	0.0
2.75	25.94	1201.9	106613.	23.0	18.000	7.000	0.0	105.00	0.0
2.80	28.55	1248.9	133464.	24.7	18.000	7.000	0.0	105.00	0.0
2.85	31.64	1304.5	170254.	26.7	18.000	7.000	0.0	105.00	0.0
2.90	35.20	1368.6	219914.	28.9	18.000	7.000	0.0	105.00	0.0
2.95	39.24	1441.3	286120.	31.4	18.000	7.000	0.0	105.00	0.0
3.00	43.75	1522.5	373400.	34.1	18.000	7.000	0.0	105.00	0.0

	FIXED END MOMENTS FCE	FEC
2.10	-0.1220	0.0086
2.20	-0.2115	0.0368
2.30	-0.2588	0.0862
2.40	-0.2586	0.1514
2.50	-0.2165	0.2165
2.60	-0.1514	0.2586
2.70	-0.0862	0.2588
2.80	-0.0368	0.2115
2.90	-0.0086	0.1220

STIFFNESS KCE= 7.9772 KEC= 7.9772

CARRY OVERS CCE= 0.6749 CEC= 0.6749

WYOMING HIGHWAY DEPARTMENT
BRIDGE DESIGN DIVISION

DATE
PAGE NO.

SAMPLE PROBLEM NO. 1 CONCRETE T GIRDER BRIDGE 740370PEKR9DES

BEAM PROPERTIES PARABOLIC DEPTH VARIATION.

SPAN NO. 3 SPAN LENGTH = 36.250 SPAN RATIO = 1.000

POINT	BEAM DEPTH	XSECT AREA	MOMENTS OF INERTIA	DIST TO CENT(X)	WIDTH OF WEB	FLANGE THICKNESS TOP	FLANGE THICKNESS BOT	FLANGE WIDTH TOP	FLANGE WIDTH BOT
3.00	43.75	1522.5	373401.	34.1	18.000	7.000	0.0	105.00	0.0
3.05	40.37	1461.6	306538.	32.1	18.000	7.000	0.0	105.00	0.0
3.10	37.24	1405.4	252039.	30.2	18.000	7.000	0.0	105.00	0.0
3.15	34.38	1353.8	207743.	28.4	18.000	7.000	0.0	105.00	0.0
3.20	31.77	1306.9	172006.	26.8	18.000	7.000	0.0	105.00	0.0
3.25	29.43	1264.7	143372.	25.3	18.000	7.000	0.0	105.00	0.0
3.30	27.35	1227.2	120607.	24.0	18.000	7.000	0.0	105.00	0.0
3.35	25.52	1194.4	102680.	22.8	18.000	7.000	0.0	105.00	0.0
3.40	23.96	1166.2	88736.	21.7	18.000	7.000	0.0	105.00	0.0
3.45	22.65	1142.7	78084.	20.9	18.000	7.000	0.0	105.00	0.0
3.50	21.61	1123.9	70176.	20.2	18.000	7.000	0.0	105.00	0.0
3.55	20.82	1109.8	64589.	19.6	18.000	7.000	0.0	105.00	0.0
3.60	20.30	1100.4	61019.	19.3	18.000	7.000	0.0	105.00	0.0
3.65	20.03	1095.6	59269.	19.1	18.000	7.000	0.0	105.00	0.0
3.70	20.00	1095.0	59041.	19.1	18.000	7.000	0.0	105.00	0.0
3.75	20.00	1095.0	59041.	19.1	18.000	7.000	0.0	105.00	0.0
3.80	20.00	1095.0	59041.	19.1	18.000	7.000	0.0	105.00	0.0
3.85	20.00	1095.0	59041.	19.1	18.000	7.000	0.0	105.00	0.0
3.90	20.00	1095.0	59041.	19.1	18.000	7.000	0.0	105.00	0.0
3.95	20.00	1095.0	59041.	19.1	18.000	7.000	0.0	105.00	0.0
4.00	20.00	1095.0	59041.	19.1	18.000	7.000	0.0	105.00	0.0

	FIXED END MOMENTS FEG	FGE
3.10	-0.0911	0.0034
3.20	-0.1616	0.0142
3.30	-0.2069	0.0327
3.40	-0.2235	0.0579
3.50	-0.2106	0.0862
3.60	-0.1723	0.1113
3.70	-0.1183	0.1243
3.80	-0.0621	0.1160
3.90	-0.0179	0.0775

STIFFNESS KEG= 10.2386 KGE= 4.7894

CARRY OVERS CEG= 0.3965 CGE= 0.8477

SAMPLE PROBLEM NO. 1 CONCRETE T GIRDER BRIDGE 740370PEKR9DES

BEAM PROPERTIES STRAGHT LINE DEPTH VARIATION.

SPAN NO. 8 SPAN LENGTH = 23.400 SPAN RATIO = 0.646

POINT	BEAM DEPTH	XSECT AREA	MOMENTS OF INERTIA	DIST TO CENT(X)	WIDTH OF WEB	FLANGE THICKNESS TOP	FLANGE THICKNESS BOT	FLANGE WIDTH TOP	FLANGE WIDTH BOT
8.00	36.00	648.0	69984.	18.0	18.000	0.0	0.0	0.0	0.0
8.05	35.10	631.8	64865.	17.6	18.000	0.0	0.0	0.0	0.0
8.10	34.20	615.6	60003.	17.1	18.000	0.0	0.0	0.0	0.0
8.15	33.30	599.4	55389.	16.7	18.000	0.0	0.0	0.0	0.0
8.20	32.40	583.2	51018.	16.2	18.000	0.0	0.0	0.0	0.0
8.25	31.50	567.0	46884.	15.8	18.000	0.0	0.0	0.0	0.0
8.30	30.60	550.8	42979.	15.3	18.000	0.0	0.0	0.0	0.0
8.35	29.70	534.6	39297.	14.9	18.000	0.0	0.0	0.0	0.0
8.40	28.80	518.4	35832.	14.4	18.000	0.0	0.0	0.0	0.0
8.45	27.90	502.2	32576.	14.0	18.000	0.0	0.0	0.0	0.0
8.50	27.00	486.0	29525.	13.5	18.000	0.0	0.0	0.0	0.0
8.55	26.10	469.8	26669.	13.1	18.000	0.0	0.0	0.0	0.0
8.60	25.20	453.6	24005.	12.6	18.000	0.0	0.0	0.0	0.0
8.65	24.30	437.4	21523.	12.2	18.000	0.0	0.0	0.0	0.0
8.70	23.40	421.2	19219.	11.7	18.000	0.0	0.0	0.0	0.0
8.75	22.50	405.0	17086.	11.3	18.000	0.0	0.0	0.0	0.0
8.80	21.60	388.8	15117.	10.8	18.000	0.0	0.0	0.0	0.0
8.85	20.70	372.6	13305.	10.4	18.000	0.0	0.0	0.0	0.0
8.90	19.80	356.4	11644.	9.9	18.000	0.0	0.0	0.0	0.0
8.95	18.90	340.2	10127.	9.5	18.000	0.0	0.0	0.0	0.0
9.00	18.00	324.0	8748.	9.0	18.000	0.0	0.0	0.0	0.0

	FIXED END MOMENTS FCD	FDC
8.10	-0.0566	0.0023
8.20	-0.0973	0.0087
8.30	-0.1220	0.0187
8.40	-0.1312	0.0313
8.50	-0.1257	0.0448
8.60	-0.1071	0.0572
8.70	-0.0785	0.0652
8.80	-0.0449	0.0638
8.90	-0.0143	0.0458

STIFFNESS KCD= 4.4670 KDC= 1.5824

CARRY OVERS CCD= 0.2953 CDC= 0.8337

WYOMING HIGHWAY DEPARTMENT
BRIDGE DESIGN DIVISION

DATE
PAGE NO.

SAMPLE PROBLEM NO. 1 CONCRETE T GIRDER BRIDGE 740370PEKR9DES

BEAM PROPERTIES STRAGHT LINE DEPTH VARIATION.

SPAN NO. 9 SPAN LENGTH = 23.400 SPAN RATIO = 0.646

POINT	BEAM DEPTH	XSECT AREA	MOMENTS OF INERTIA	DIST TO CENT(X)	WIDTH OF WEB	FLANGE THICKNESS TOP	FLANGE THICKNESS BOT	FLANGE WIDTH TOP	FLANGE WIDTH BOT
9.00	36.00	648.0	69984.	18.0	18.000	0.0	0.0	0.0	0.0
9.05	35.10	631.8	64865.	17.6	18.000	0.0	0.0	0.0	0.0
9.10	34.20	615.6	60003.	17.1	18.000	0.0	0.0	0.0	0.0
9.15	33.30	599.4	55389.	16.7	18.000	0.0	0.0	0.0	0.0
9.20	32.40	583.2	51018.	16.2	18.000	0.0	0.0	0.0	0.0
9.25	31.50	567.0	46884.	15.8	18.000	0.0	0.0	0.0	0.0
9.30	30.60	550.8	42979.	15.3	18.000	0.0	0.0	0.0	0.0
9.35	29.70	534.6	39297.	14.9	18.000	0.0	0.0	0.0	0.0
9.40	28.80	518.4	35832.	14.4	18.000	0.0	0.0	0.0	0.0
9.45	27.90	502.2	32576.	14.0	18.000	0.0	0.0	0.0	0.0
9.50	27.00	486.0	29525.	13.5	18.000	0.0	0.0	0.0	0.0
9.55	26.10	469.8	26669.	13.1	18.000	0.0	0.0	0.0	0.0
9.60	25.20	453.6	24005.	12.6	18.000	0.0	0.0	0.0	0.0
9.65	24.30	437.4	21523.	12.2	18.000	0.0	0.0	0.0	0.0
9.70	23.40	421.2	19219.	11.7	18.000	0.0	0.0	0.0	0.0
9.75	22.50	405.0	17086.	11.3	18.000	0.0	0.0	0.0	0.0
9.80	21.60	388.8	15117.	10.8	18.000	0.0	0.0	0.0	0.0
9.85	20.70	372.6	13305.	10.4	18.000	0.0	0.0	0.0	0.0
9.90	19.80	356.4	11644.	9.9	18.000	0.0	0.0	0.0	0.0
9.95	18.90	340.2	10127.	9.5	18.000	0.0	0.0	0.0	0.0
10.00	18.00	324.0	8748.	9.0	18.000	0.0	0.0	0.0	0.0

	FIXED END MOMENTS FEF	FEF
9.10	-0.0566	0.0023
9.20	-0.0973	0.0087
9.30	-0.1220	0.0187
9.40	-0.1312	0.0313
9.50	-0.1257	0.0448
9.60	-0.1071	0.0572
9.70	-0.0785	0.0652
9.80	0.0449	0.0638
9.90	-0.0143	0.0458

STIFFNESS KEF= 4.4670 KFF= 1.5924

CARRY OVERS CEF= 0.2953 CFE= 0.8337

SAMPLE PROBLEM NO. 1 CONCRETE T GIRDER BRIDGE 740370PEKR9DES

STIFFNESS AND CARRYOVER FACTORS AS USED IN MATRIX INVERSION

SPAN NO.	STIFFNESS	CARRYOVERS	STIFFNESS
1	KAC=0.478940E 01	CAC=0.847657E 00	KCA=0.102386E 02
2	KCE=0.797718E 01	CCE=0.674872E 00	KEC=0.797721E 01
3	KEG=0.102386E 02	CEG=0.396518E 00	KGE=0.478942E 01
4	KGI=0.100000E-09	CGI=0.100000E 01	KIG=0.100000E-09
5	KIK=0.100000E-09	CIK=0.100000E 01	KKI=0.100000E-09
6	KKM=0.100000E-09	CKM=0.100000E 01	KMK=0.100000E-09
7	KAB=0.100000E-09	CAB=0.100000E 01	KBA=0.100000E-09
8	KCD=0.446697E 01	CCD=0.295339E 00	KDC=0.158243E 01
9	KEF=0.446697E 01	CEF=0.295339E 00	KFE=0.158243E 01
10	KGH=0.100000E-09	CGH=0.100000E 01	KHG=0.100000E-09
11	KIJ=0.100000E-09	CIJ=0.100000E 01	KJI=0.100000E-09
12	KKL=0.100000E-09	CKL=0.100000E 01	KLK=0.100000E-09
13	KMN=0.100000E-09	CMN=0.100000E 01	KNM=0.100000E-09
14	KBD=0.100000E-09	CBD=0.100000E 01	KDB=0.100000E-09
15	KDF=0.100000E-09	CDF=0.100000E 01	KFD=0.100000E-09
16	KFH=0.100000E-09	CFH=0.100000E 01	KHF=0.100000E-09
17	KHJ=0.100000E-09	CHJ=0.100000E 01	KJH=0.100000E-09
18	KJL=0.100000E-09	CJL=0.100000E 01	KLJ=0.100000E-09
19	KLN=0.100000E-09	CLN=0.100000E 01	KNL=0.100000E-09

SAMPLE PROBLEM NO. 1 CONCRETE T GIRDER BRIDGE 740370PEKR9DES

2 4 1CT

CELL 7 ANALYSIS

```
MCA=+ 0.5891ECA+-0.4109ECE+ 0.1219EEC+ 0.1219EEG+-0.1033EGE+-0.1033EGI+ 0.1033EIG+ 0.1033EIK+-0.1033EKI+
    +-0.1033EKM+-0.4994EAC+-0.4109ECD+ 0.3425EDC+ 0.1219EEE+-0.1016EEE+-0.1033EGH+ 0.1033EHG+ 0.1033EIJ+
    +-0.1033EJI+-0.1033EKL+ 0.1033ELK+ 0.1033EMK+ 0.0       0.0       0.0       0.0       0.0
MCE=+-0.3856ECA+ 0.6144ECE+-0.1823EEC+-0.1823EEG+ 0.1545EGE+ 0.1545EGI+-0.1545EIG+-0.1545EIK+ 0.1545EKI+
    + 0.1545EKM+ 0.3269EAC+-0.3856ECD+ 0.3215EDC+-0.1823EEE+ 0.1520EEE+ 0.1545EGH+-0.1545EHG+-0.1545EIJ+
    + 0.1545EJI+ 0.1545EKL+-0.1545ELK+-0.1545EMK+ 0.0       0.0       0.0       0.0       0.0
MEC=+-0.1823ECA+-0.1823ECE+ 0.6144EEC+-0.3856EEG+ 0.3269EGE+ 0.3269EGI+-0.3269EIG+-0.3269EIK+ 0.3269EKI+
    + 0.3269EKM+ 0.1545EAC+-0.1823ECD+ 0.1520EDC+-0.3856EEE+ 0.3215EEE+ 0.3269EGH+-0.3269EHG+-0.3269EIJ+
    + 0.3269EJI+ 0.3269EKL+-0.3269ELK+-0.3269EMK+ 0.0       0.0       0.0       0.0       0.0
MEG=+ 0.1219ECA+ 0.1219ECE+-0.4109EEC+ 0.5891EEG+-0.4994EGE+-0.4994EGI+ 0.4994EIG+ 0.4994EIK+-0.4994EKI+
    +-0.4994EKM+-0.1033EAC+ 0.1219ECD+-0.1016EDC+-0.4109EEE+ 0.3425EEE+-0.4994EGH+ 0.4994EHG+ 0.4994EIJ+
    +-0.4994EJI+-0.4994EKL+ 0.4994ELK+ 0.4994EMK+ 0.0       0.0       0.0       0.0       0.0
MGE=+ 0.0   ECA+ 0.0   ECE+ 0.0   EEC+ 0.0   EEG+ 0.0   EGE+-1.0000EGI+ 1.0000EIG+ 1.0000EIK+-1.0000EKI+
    +-1.0000EKM+ 0.0000EAC+ 0.0   ECD+ 0.0000EDC+ 0.0   EEE+ 0.0   EEE+-1.0000EGH+ 1.0000EHG+ 1.0000EIJ+
    +-1.0000EJI+-1.0000EKL+ 1.0000ELK+ 1.0000EMK+ 0.0       0.0       0.0       0.0       0.0
MGI=+ 0.0000ECA+ 0.0000ECE+-0.0000EEC+-0.0000EEG+ 0.0000EGE+ 1.0000EGI+-1.0000EIG+-1.0000EIK+ 1.0000EKI+
    + 1.0000EKM+-0.0000EAC+ 0.0000ECD+-0.0000EDC+-0.0000EEE+ 0.0000EEE+ 0.0000EGH+-0.0000EHG+-1.0000EIJ+
    + 1.0000EJI+ 1.0000EKL+-1.0000ELK+-1.0000EMK+ 0.0       0.0       0.0       0.0       0.0
MIG=+ 0.0000ECA+ 0.0000ECE+-0.0000EEC+-0.0000EEG+ 0.0000EGE+ 0.0000EGI+-0.0000EIG+-1.0000EIK+ 1.0000EKI+
    + 1.0000EKM+-0.0000EAC+ 0.0000ECD+-0.0000EDC+-0.0000EEE+ 0.0000EEE+ 0.0000EGH+-0.0000EHG+-1.0000EIJ+
    + 1.0000EJI+ 1.0000EKL+-1.0000ELK+-1.0000EMK+ 0.0       0.0       0.0       0.0       0.0
MIK=+-0.0000ECA+-0.0000ECE+ 0.0000EEC+ 0.0000EEG+-0.0000EGE+-0.0000EGI+ 0.0000EIG+ 1.0000EIK+-1.0000EKI+
    +-1.0000EKM+ 0.0000EAC+-0.0000ECD+ 0.0000EDC+ 0.0000EEE+-0.0000EEE+-0.0000EGH+ 0.0000EHG+ 0.0000EIJ+
    +-0.0000EJI+-1.0000EKL+ 1.0000ELK+ 1.0000EMK+ 0.0       0.0       0.0       0.0       0.0
MKI=+-0.0000ECA+-0.0000ECE+ 0.0000EEC+ 0.0000EEG+-0.0000EGE+-0.0000EGI+ 0.0000EIG+ 0.0000EIK+-0.0000EKI+
    +-1.0000EKM+ 0.0000EAC+-0.0000ECD+ 0.0000EDC+ 0.0000EEE+-0.0000EEE+-0.0000EGH+ 0.0000EHG+ 0.0000EIJ+
    +-0.0000EJI+-1.0000EKL+ 1.0000ELK+ 1.0000EMK+ 0.0       0.0       0.0       0.0       0.0
MKM=+ 0.0   ECA+ 0.0   ECE+ 0.0000EEC+ 0.0000EEG+ 0.0000EGE+ 0.0000EGI+-0.0000EIG+-0.0000EIK+ 0.0   EKI+
    + 1.0000EKM+ 0.0   EAC+ 0.0   ECD+ 0.0   EDC+ 0.0000EEE+-0.0000EEE+ 0.0000EGH+-0.0000EHG+-0.0000EIJ+
    + 0.0000EJI+ 0.0   EKL+ 0.0000ELK+-1.0000EMK+ 0.0       0.0       0.0       0.0       0.0
```

SAMPLE PROBLEM NO. 1 CONCRETE T GIRDER BRIDGE 740370PEKRODES

2 4 1CT

CELL 7 ANALYSIS

15.

SAMPLE PROBLEM NO. 1 CONCRETE T GIRDER BRIDGE 740370PEKR9DES

INFLUENCE LINES

LOAD POINTS	V 1.0R	M 1.0R	M 1.1	M 1.2	M 1.3	M 1.4	M 1.5
1.1	0.850729	0.0	0.0	0.0	0.0	0.040291	0.0
1.2	0.705463	0.0	0.0	0.0	0.0	0.082185	0.0
1.3	0.568205	0.0	0.0	0.0	0.0	0.127282	0.0
1.4	0.442919	0.0	0.0	0.0	0.0	0.177167	0.0
1.5	0.332874	0.0	0.0	0.0	0.0	0.133149	0.0
1.6	0.239408	0.0	0.0	0.0	0.0	0.095763	0.0
1.7	0.161740	0.0	0.0	0.0	0.0	0.064696	0.0
1.8	0.097697	0.0	0.0	0.0	0.0	0.039079	0.0
1.9	0.044624	0.0	0.0	0.0	0.0	0.017849	0.0
2.1	-0.051167	0.0	0.0	0.0	0.0	-0.020467	0.0
2.2	-0.091391	0.0	0.0	0.0	0.0	-0.036556	0.0
2.3	-0.116850	0.0	0.0	0.0	0.0	-0.046740	0.0
2.4	-0.124690	0.0	0.0	0.0	0.0	-0.049876	0.0
2.5	-0.115355	0.0	0.0	0.0	0.0	-0.046142	0.0
2.6	-0.093719	0.0	0.0	0.0	0.0	-0.037488	0.0
2.7	-0.066961	0.0	0.0	0.0	0.0	-0.026784	0.0
2.8	-0.040914	0.0	0.0	0.0	0.0	-0.016366	0.0
2.9	-0.018419	0.0	0.0	0.0	0.0	-0.007368	0.0
3.1	0.011460	0.0	0.0	0.0	0.0	0.004584	0.0
3.2	0.021172	0.0	0.0	0.0	0.0	0.008469	0.0
3.3	0.028614	0.0	0.0	0.0	0.0	0.011445	0.0
3.4	0.033235	0.0	0.0	0.0	0.0	0.013294	0.0
3.5	0.034587	0.0	0.0	0.0	0.0	0.013835	0.0
3.6	0.032509	0.0	0.0	0.0	0.0	0.013003	0.0
3.7	0.027276	0.0	0.0	0.0	0.0	0.010910	0.0
3.8	0.019565	0.0	0.0	0.0	0.0	0.007826	0.0
3.9	0.010197	0.0	0.0	0.0	0.0	0.004079	0.0
AREA 1=	0.394365	0.0	0.0	0.0	0.0	0.077746	0.0
AREA 2=	-0.097252	0.0	0.0	0.0	0.0	-0.038901	0.0
AREA 3=	0.021861	0.0	0.0	0.0	0.0	0.008745	0.0

WYOMING HIGHWAY DEPARTMENT
BRIDGE DESIGN DIVISION

DATE
PAGE NO. 14

SAMPLE PROBLEM NO. 1 CONCRETE T GIRDER BRIDGE 740370PEKR9DES

INFLUENCE LINES

LOAD POINTS	V 1.0R	M 1.0R	M 1.1	M 1.2	M 1.3	M 1.4	M 1.5
8.1	-0.024035	0.0	0.0	0.0	0.0	-0.009614	0.0
8.2	-0.042967	0.0	0.0	0.0	0.0	-0.017187	0.0
8.3	-0.056565	0.0	0.0	0.0	0.0	-0.022626	0.0
8.4	-0.064625	0.0	0.0	0.0	0.0	-0.025850	0.0
8.5	-0.066995	0.0	0.0	0.0	0.0	-0.026798	0.0
8.6	-0.063616	0.0	0.0	0.0	0.0	-0.025446	0.0
8.7	-0.054589	0.0	0.0	0.0	0.0	-0.021836	0.0
8.8	-0.040288	0.0	0.0	0.0	0.0	-0.016115	0.0
8.9	-0.021550	0.0	0.0	0.0	0.0	-0.008620	0.0
9.1	0.007132	0.0	0.0	0.0	0.0	0.002853	0.0
9.2	0.012751	0.0	0.0	0.0	0.0	0.005100	0.0
9.3	0.016786	0.0	0.0	0.0	0.0	0.006714	0.0
9.4	0.019178	0.0	0.0	0.0	0.0	0.007671	0.0
9.5	0.019881	0.0	0.0	0.0	0.0	0.007952	0.0
9.6	0.018878	0.0	0.0	0.0	0.0	0.007551	0.0
9.7	0.016199	0.0	0.0	0.0	0.0	0.006480	0.0
9.8	0.011956	0.0	0.0	0.0	0.0	0.004782	0.0
9.9	0.006395	0.0	0.0	0.0	0.0	0.002558	0.0
AREA 8=	-0.028095	0.0	0.0	0.0	0.0	-0.011238	0.0
AREA 9=	0.008337	0.0	0.0	0.0	0.0	0.003335	0.0
SUM - =	-0.125347	0.0	0.0	0.0	0.0	-0.050139	0.0
SUM + =	0.424564	0.0	0.0	0.0	0.0	0.089826	0.0
SUM TOT	0.299217	0.0	0.0	0.0	0.0	0.039687	0.0

SAMPLE PROBLEM NO. 1 CONCRETE T GIRDER BRIDGE 740370PEKR9DES

INFLUENCE LINES

LOAD POINTS	M 1.6	M 1.7	M 1.8	M 1.9	M 2.0L	V 2.0L	R 2.0
1.1	0.0	0.0	0.0	0.0	-0.049271	-0.149271	0.184410
1.2	0.0	0.0	0.0	0.0	-0.094537	-0.294537	0.361959
1.3	0.0	0.0	0.0	0.0	-0.131795	-0.431795	0.525787
1.4	0.0	0.0	0.0	0.0	-0.157081	-0.557081	0.669107
1.5	0.0	0.0	0.0	0.0	-0.167127	-0.667126	0.786316
1.6	0.0	0.0	0.0	0.0	-0.160592	-0.760592	0.875122
1.7	0.0	0.0	0.0	0.0	-0.138260	-0.838260	0.936863
1.8	0.0	0.0	0.0	0.0	-0.102303	-0.902303	0.975262
1.9	0.0	0.0	0.0	0.0	-0.055377	-0.955376	0.994869
2.1	0.0	0.0	0.0	0.0	-0.051167	-0.051167	0.987395
2.2	0.0	0.0	0.0	0.0	-0.091391	-0.091391	0.947231
2.3	0.0	0.0	0.0	0.0	-0.116850	-0.116850	0.872039
2.4	0.0	0.0	0.0	0.0	-0.124690	-0.124690	0.758952
2.5	0.0	0.0	0.0	0.0	-0.115355	-0.115355	0.615354
2.6	0.0	0.0	0.0	0.0	-0.093719	-0.093719	0.459457
2.7	0.0	0.0	0.0	0.0	-0.066961	-0.066961	0.311770
2.8	0.0	0.0	0.0	0.0	-0.040914	-0.040914	0.185074
2.9	0.0	0.0	0.0	0.0	-0.018419	-0.018419	0.082191
3.1	0.0	0.0	0.0	0.0	0.011460	0.011460	-0.050953
3.2	0.0	0.0	0.0	0.0	0.021172	0.021172	-0.094131
3.3	0.0	0.0	0.0	0.0	0.028614	0.028614	-0.127217
3.4	0.0	0.0	0.0	0.0	0.033235	0.033235	-0.147765
3.5	0.0	0.0	0.0	0.0	0.034587	0.034587	-0.153777
3.6	0.0	0.0	0.0	0.0	0.032509	0.032509	-0.144535
3.7	0.0	0.0	0.0	0.0	0.027276	0.027276	-0.121268
3.8	0.0	0.0	0.0	0.0	0.019565	0.019565	-0.086986
3.9	0.0	0.0	0.0	0.0	0.010197	0.010197	-0.045336
AREA 1=	0.0	0.0	0.0	0.0	-0.105634	-0.605634	0.680969
AREA 2=	0.0	0.0	0.0	0.0	-0.097252	-0.097252	0.773113
AREA 3=	0.0	0.0	0.0	0.0	0.021861	0.021861	-0.097197

WYOMING HIGHWAY DEPARTMENT
BRIDGE DESIGN DIVISION

DATE
PAGE NO. 16

SAMPLE PROBLEM NO. 1 CONCRETE T GIRDER BRIDGE 740370PEKR9DES

INFLUENCE LINES

LOAD POINTS	M 1.6	M 1.7	M 1.8	M 1.9	M 2.0L	V 2.0L	R 2.0
8.1	0.0	0.0	0.0	0.0	-0.024035	-0.024035	-0.000544
8.2	0.0	0.0	0.0	0.0	-0.042967	-0.042967	-0.000972
8.3	0.0	0.0	0.0	0.0	-0.056565	-0.056565	-0.001279
8.4	0.0	0.0	0.0	0.0	-0.064625	-0.064625	-0.001462
8.5	0.0	0.0	0.0	0.0	-0.066995	-0.066995	-0.001515
8.6	0.0	0.0	0.0	0.0	-0.063616	-0.063616	-0.001439
8.7	0.0	0.0	0.0	0.0	-0.054589	-0.054589	-0.001235
8.8	0.0	0.0	0.0	0.0	-0.040288	-0.040288	-0.000911
8.9	0.0	0.0	0.0	0.0	-0.021550	-0.021550	-0.000487
9.1	0.0	0.0	0.0	0.0	0.007132	0.007132	-0.031711
9.2	0.0	0.0	0.0	0.0	0.012751	0.012751	-0.056689
9.3	0.0	0.0	0.0	0.0	0.016786	0.016786	-0.074630
9.4	0.0	0.0	0.0	0.0	0.019178	0.019178	-0.085265
9.5	0.0	0.0	0.0	0.0	0.019881	0.019881	-0.088391
9.6	0.0	0.0	0.0	0.0	0.018878	0.018878	-0.083933
9.7	0.0	0.0	0.0	0.0	0.016199	0.016199	-0.072023
9.8	0.0	0.0	0.0	0.0	0.011956	0.011956	-0.053155
9.9	0.0	0.0	0.0	0.0	0.006395	0.006395	-0.028433
AREA 8=	0.0	0.0	0.0	0.0	-0.028095	-0.028095	-0.000635
AREA 9=	0.0	0.0	0.0	0.0	0.008337	0.008337	-0.037068
SUM - =	0.0	0.0	0.0	0.0	-0.230981	-0.730981	-0.134900
SUM + =	0.0	0.0	0.0	0.0	0.030199	0.030199	1.454082
SUM TOT	0.0	0.0	0.0	0.0	-0.200782	-0.700782	1.319181

WYOMING HIGHWAY DEPARTMENT
BRIDGE DESIGN DIVISION

DATE
PAGE NO. 17

SAMPLE PROBLEM NO. 1 CONCRETE T GIRDER BRIDGE 740370PEKRODES

INFLUENCE LINES

LOAD POINTS	V 2.0R	M 2.0R	M 2.1	M 2.2	M 2.3	M 2.4	M 2.5
1.1	0.035139	-0.032250	0.0	0.0	0.0	0.0	-0.008501
1.2	0.067421	-0.061878	0.0	0.0	0.0	0.0	-0.016311
1.3	0.093992	-0.086265	0.0	0.0	0.0	0.0	-0.022739
1.4	0.112026	-0.102816	0.0	0.0	0.0	0.0	-0.027102
1.5	0.119190	-0.109391	0.0	0.0	0.0	0.0	-0.028835
1.6	0.114530	-0.105114	0.0	0.0	0.0	0.0	-0.027708
1.7	0.098603	-0.090497	0.0	0.0	0.0	0.0	-0.023855
1.8	0.072959	-0.066961	0.0	0.0	0.0	0.0	-0.017651
1.9	0.039493	-0.036246	0.0	0.0	0.0	0.0	-0.009554
2.1	0.936228	-0.076513	0.0	0.0	0.0	0.0	0.015558
2.2	0.855840	-0.136662	0.0	0.0	0.0	0.0	0.036250
2.3	0.755190	-0.174732	0.0	0.0	0.0	0.0	0.065327
2.4	0.634262	-0.186457	0.0	0.0	0.0	0.0	0.107044
2.5	0.500000	-0.172497	0.0	0.0	0.0	0.0	0.165434
2.6	0.365737	-0.140144	0.0	0.0	0.0	0.0	0.107044
2.7	0.244810	-0.100130	0.0	0.0	0.0	0.0	0.065327
2.8	0.144160	-0.061182	0.0	0.0	0.0	0.0	0.036250
2.9	0.063772	-0.027543	0.0	0.0	0.0	0.0	0.015558
3.1	-0.039493	0.017137	0.0	0.0	0.0	0.0	-0.009554
3.2	-0.072959	0.031660	0.0	0.0	0.0	0.0	-0.017651
3.3	-0.098603	0.042788	0.0	0.0	0.0	0.0	-0.023855
3.4	-0.114529	0.049698	0.0	0.0	0.0	0.0	-0.027708
3.5	-0.119190	0.051721	0.0	0.0	0.0	0.0	-0.028835
3.6	-0.112026	0.048612	0.0	0.0	0.0	0.0	-0.027102
3.7	-0.093993	0.040787	0.0	0.0	0.0	0.0	-0.022739
3.8	-0.067421	0.029257	0.0	0.0	0.0	0.0	-0.016311
3.9	-0.035139	0.015248	0.0	0.0	0.0	0.0	-0.008501
AREA 1=	0.075335	-0.069142	0.0	0.0	0.0	0.0	-0.018226
AREA 2=	0.675861	-0.145426	0.0	0.0	0.0	0.0	0.082968
AREA 3=	-0.075335	0.032691	0.0	0.0	0.0	0.0	-0.018226

WYOMING HIGHWAY DEPARTMENT

BRIDGE DESIGN DIVISION

SAMPLE PROBLEM NO. 1 CONCRETE T GIRDER BRIDGE 740370PEKRPDES

DATE

PAGE NO. 18

LOAD INFLUENCE LINES

POINTS	V 2.0R	M 2.0R	M 2.1	M 2.2	M 2.3	M 2.4	M 2.5
8.1	-0.024579	0.022558	0.0	0.0	0.0	0.0	0.005946
8.2	-0.043939	0.040326	0.0	0.0	0.0	0.0	0.010630
8.3	-0.057844	0.053099	0.0	0.0	0.0	0.0	0.013994
8.4	-0.066087	0.060654	0.0	0.0	0.0	0.0	0.015988
8.5	-0.068510	0.062878	0.0	0.0	0.0	0.0	0.016574
8.6	-0.065054	0.059706	0.0	0.0	0.0	0.0	0.015738
8.7	-0.055824	0.051234	0.0	0.0	0.0	0.0	0.013505
8.8	-0.041200	0.037812	0.0	0.0	0.0	0.0	0.009967
8.9	-0.022037	0.020226	0.0	0.0	0.0	0.0	0.005331
9.1	-0.024579	0.010666	0.0	0.0	0.0	0.0	-0.005946
9.2	-0.043939	0.019067	0.0	0.0	0.0	0.0	-0.010630
9.3	-0.057844	0.025101	0.0	0.0	0.0	0.0	-0.013994
9.4	-0.066087	0.028677	0.0	0.0	0.0	0.0	-0.015988
9.5	-0.068510	0.029729	0.0	0.0	0.0	0.0	-0.016574
9.6	-0.065055	0.028230	0.0	0.0	0.0	0.0	-0.015738
9.7	-0.055824	0.024224	0.0	0.0	0.0	0.0	-0.013505
9.8	-0.041200	0.017878	0.0	0.0	0.0	0.0	-0.009967
9.9	-0.022037	0.009563	0.0	0.0	0.0	0.0	-0.005331
AREA 8=	-0.028730	0.026368	0.0	0.0	0.0	0.0	0.006951
AREA 9=	-0.028730	0.012467	0.0	0.0	0.0	0.0	-0.006951
SUM - =	-0.132796	-0.214568	0.0	0.0	0.0	0.0	-0.043402
SUM + =	0.751196	0.071526	0.0	0.0	0.0	0.0	0.089918
SUM TOT	0.618401	-0.143042	0.0	0.0	0.0	0.0	0.046517

SAMPLE PROBLEM NO. 1 CONCRETE T GIRDER BRIDGE 740370PEKR9DES

INFLUENCE LINES

LOAD POINTS	M 2.6	M 2.7	M 2.8	M 2.9	M 3.0L	V 3.0L	R 3.0
1.1	0.0	0.0	0.0	0.0	0.015248	0.035139	-0.045336
1.2	0.0	0.0	0.0	0.0	0.029257	0.067421	-0.086986
1.3	0.0	0.0	0.0	0.0	0.040787	0.093992	-0.121268
1.4	0.0	0.0	0.0	0.0	0.048612	0.112026	-0.144534
1.5	0.0	0.0	0.0	0.0	0.051721	0.119190	-0.153777
1.6	0.0	0.0	0.0	0.0	0.049699	0.114530	-0.147765
1.7	0.0	0.0	0.0	0.0	0.042788	0.098603	-0.127217
1.8	0.0	0.0	0.0	0.0	0.031660	0.072959	-0.094131
1.9	0.0	0.0	0.0	0.0	0.017137	0.039493	-0.050953
2.1	0.0	0.0	0.0	0.0	-0.027543	-0.063772	0.082191
2.2	0.0	0.0	0.0	0.0	-0.061182	-0.144160	0.185075
2.3	0.0	0.0	0.0	0.0	-0.100131	-0.244810	0.311771
2.4	0.0	0.0	0.0	0.0	-0.140144	-0.365738	0.459458
2.5	0.0	0.0	0.0	0.0	-0.172498	-0.500000	0.615356
2.6	0.0	0.0	0.0	0.0	-0.186457	-0.634263	0.758953
2.7	0.0	0.0	0.0	0.0	-0.174733	-0.755190	0.872040
2.8	0.0	0.0	0.0	0.0	-0.136663	-0.855840	0.947232
2.9	0.0	0.0	0.0	0.0	-0.076513	-0.936228	0.987395
3.1	0.0	0.0	0.0	0.0	-0.036246	-0.039493	0.994869
3.2	0.0	0.0	0.0	0.0	-0.066961	-0.072959	0.975262
3.3	0.0	0.0	0.0	0.0	-0.090497	-0.098603	0.936864
3.4	0.0	0.0	0.0	0.0	-0.105114	-0.114529	0.875122
3.5	0.0	0.0	0.0	0.0	-0.109391	-0.119190	0.786316
3.6	0.0	0.0	0.0	0.0	-0.102816	-0.112026	0.669108
3.7	0.0	0.0	0.0	0.0	-0.086265	-0.093993	0.525788
3.8	0.0	0.0	0.0	0.0	-0.061879	-0.067421	0.361959
3.9	0.0	0.0	0.0	0.0	-0.032250	-0.035139	0.184410
AREA 1=	0.0	0.0	0.0	0.0	0.032691	0.075335	-0.097197
AREA 2=	0.0	0.0	0.0	0.0	-0.145427	-0.675862	0.773114
AREA 3=	0.0	0.0	0.0	0.0	-0.069142	-0.075335	0.680969

WYOMING HIGHWAY DEPARTMENT
BRIDGE DESIGN DIVISION

DATE
PAGE NO. 20

SAMPLE PROBLEM NO. 1 CONCRETE T GIRDER BRIDGE 740370PEKR9DES

INFLUENCE LINES

LOAD POINTS	M 2.6	M 2.7	M 2.8	M 2.9	M 3.0L	V 3.0L	R 3.0
8.1	0.0	0.0	0.0	0.0	-0.010666	-0.024579	0.031711
8.2	0.0	0.0	0.0	0.0	-0.019066	-0.043939	0.056689
8.3	0.0	0.0	0.0	0.0	-0.025101	-0.057844	0.074630
8.4	0.0	0.0	0.0	0.0	-0.028677	-0.066087	0.085264
8.5	0.0	0.0	0.0	0.0	-0.029729	-0.068510	0.088391
8.6	0.0	0.0	0.0	0.0	-0.028229	-0.065054	0.083933
8.7	0.0	0.0	0.0	0.0	-0.024224	-0.055824	0.072023
8.8	0.0	0.0	0.0	0.0	-0.017878	-0.041200	0.053155
8.9	0.0	0.0	0.0	0.0	-0.009563	-0.022037	0.028432
9.1	0.0	0.0	0.0	0.0	-0.022558	-0.024579	0.000544
9.2	0.0	0.0	0.0	0.0	-0.040326	-0.043939	0.000972
9.3	0.0	0.0	0.0	0.0	-0.053089	-0.057844	0.001290
9.4	0.0	0.0	0.0	0.0	-0.060654	-0.066087	0.001462
9.5	0.0	0.0	0.0	0.0	-0.062878	-0.068510	0.001516
9.6	0.0	0.0	0.0	0.0	-0.059707	-0.065055	0.001439
9.7	0.0	0.0	0.0	0.0	-0.051235	-0.055824	0.001235
9.8	0.0	0.0	0.0	0.0	-0.037813	-0.041200	0.000912
9.9	0.0	0.0	0.0	0.0	-0.020226	-0.022037	0.000488
AREA 8=	0.0	0.0	0.0	0.0	-0.012467	-0.028730	0.037067
AREA 9=	0.0	0.0	0.0	0.0	-0.026368	-0.028730	0.000636
SUM - =	0.0	0.0	0.0	0.0	-0.253404	-0.808657	-0.097197
SUM + =	0.0	0.0	0.0	0.0	0.032691	0.075335	1.491785
SUM TOT	0.0	0.0	0.0	0.0	-0.220713	-0.733322	1.394588

SAMPLE PROBLEM NO. 1 CONCRETE T GIRDER BRIDGE 740370PEKRPDES

INFLUENCE LINES

LOAD POINTS	V 3.0R	M 3.0R	M 3.1	M 3.2	M 3.3	M 3.4	M 3.5
1.1	-0.010197	0.010197	0.0	0.0	0.0	0.0	0.0
1.2	-0.019565	0.019565	0.0	0.0	0.0	0.0	0.0
1.3	-0.027275	0.027275	0.0	0.0	0.0	0.0	0.0
1.4	-0.032509	0.032509	0.0	0.0	0.0	0.0	0.0
1.5	-0.034587	0.034587	0.0	0.0	0.0	0.0	0.0
1.6	-0.033235	0.033235	0.0	0.0	0.0	0.0	0.0
1.7	-0.028614	0.028614	0.0	0.0	0.0	0.0	0.0
1.8	-0.021172	0.021172	0.0	0.0	0.0	0.0	0.0
1.9	-0.011460	0.011460	0.0	0.0	0.0	0.0	0.0
2.1	0.018419	-0.018419	0.0	0.0	0.0	0.0	0.0
2.2	0.040915	-0.040915	0.0	0.0	0.0	0.0	0.0
2.3	0.066961	-0.066961	0.0	0.0	0.0	0.0	0.0
2.4	0.093719	-0.093719	0.0	0.0	0.0	0.0	0.0
2.5	0.115355	-0.115355	0.0	0.0	0.0	0.0	0.0
2.6	0.124691	-0.124691	0.0	0.0	0.0	0.0	0.0
2.7	0.116850	-0.116850	0.0	0.0	0.0	0.0	0.0
2.8	0.091391	-0.091391	0.0	0.0	0.0	0.0	0.0
2.9	0.051167	-0.051167	0.0	0.0	0.0	0.0	0.0
3.1	0.955376	-0.055376	0.0	0.0	0.0	0.0	0.0
3.2	0.902303	-0.102303	0.0	0.0	0.0	0.0	0.0
3.3	0.838261	-0.138261	0.0	0.0	0.0	0.0	0.0
3.4	0.760592	-0.160592	0.0	0.0	0.0	0.0	0.0
3.5	0.667127	-0.167126	0.0	0.0	0.0	0.0	0.0
3.6	0.557082	-0.157081	0.0	0.0	0.0	0.0	0.0
3.7	0.431795	-0.131795	0.0	0.0	0.0	0.0	0.0
3.8	0.294538	-0.094537	0.0	0.0	0.0	0.0	0.0
3.9	0.149271	-0.049271	0.0	0.0	0.0	0.0	0.0
AREA 1=	-0.021861	0.021861	0.0	0.0	0.0	0.0	0.0
AREA 2=	0.097252	-0.097252	0.0	0.0	0.0	0.0	0.0
AREA 3=	0.605634	-0.105634	0.0	0.0	0.0	0.0	0.0

WYOMING HIGHWAY DEPARTMENT
BRIDGE DESIGN DIVISION

DATE
PAGE NO. 22

SAMPLE PROBLEM NO. 1 CONCRETE T GIRDER BRIDGE 740370PEKR9DES

INFLUENCE LINES

LOAD POINTS	V 3.0R	M 3.0R	M 3.1	M 3.2	M 3.3	M 3.4	M 3.5
8.1	0.007132	-0.007132	0.0	0.0	0.0	0.0	0.0
8.2	0.012750	-0.012750	0.0	0.0	0.0	0.0	0.0
8.3	0.016786	-0.016786	0.0	0.0	0.0	0.0	0.0
8.4	0.019178	-0.019178	0.0	0.0	0.0	0.0	0.0
8.5	0.019881	-0.019881	0.0	0.0	0.0	0.0	0.0
8.6	0.018878	-0.018878	0.0	0.0	0.0	0.0	0.0
8.7	0.016199	-0.016199	0.0	0.0	0.0	0.0	0.0
8.8	0.011956	-0.011956	0.0	0.0	0.0	0.0	0.0
8.9	0.006395	-0.006395	0.0	0.0	0.0	0.0	0.0
9.1	-0.024035	0.024035	0.0	0.0	0.0	0.0	0.0
9.2	-0.042967	0.042967	0.0	0.0	0.0	0.0	0.0
9.3	-0.056564	0.056564	0.0	0.0	0.0	0.0	0.0
9.4	-0.064625	0.064625	0.0	0.0	0.0	0.0	0.0
9.5	-0.066995	0.066995	0.0	0.0	0.0	0.0	0.0
9.6	-0.063615	0.063615	0.0	0.0	0.0	0.0	0.0
9.7	-0.054589	0.054589	0.0	0.0	0.0	0.0	0.0
9.8	-0.040288	0.040288	0.0	0.0	0.0	0.0	0.0
9.9	-0.021550	0.021550	0.0	0.0	0.0	0.0	0.0
AREA 8=	0.008337	-0.008337	0.0	0.0	0.0	0.0	0.0
AREA 9=	-0.028095	0.028095	0.0	0.0	0.0	0.0	0.0
SUM - =	-0.049956	-0.211223	0.0	0.0	0.0	0.0	0.0
SUM + =	0.711223	0.049956	0.0	0.0	0.0	0.0	0.0
SUM TOT	0.661267	-0.161267	0.0	0.0	0.0	0.0	0.0

WYOMING HIGHWAY DEPARTMENT
BRIDGE DESIGN DIVISION

DATE
PAGE NO. 23

SAMPLE PROBLEM NO. 1 CONCRETE T GIRDER BRIDGE 740370PEKRODES

INFLUENCE LINES

LOAD POINTS	M 3.6	M 3.7	M 3.8	M 3.9	M 4.0L	V 4.0L	R 4.0
1.1	0.0	0.0	0.0	0.0	0.000000	-0.010197	0.010197
1.2	0.0	0.0	0.0	0.0	0.000000	-0.019565	0.019565
1.3	0.0	0.0	0.0	0.0	0.000000	-0.027275	0.027275
1.4	0.0	0.0	0.0	0.0	0.000000	-0.032509	0.032509
1.5	0.0	0.0	0.0	0.0	0.000000	-0.034587	0.034587
1.6	0.0	0.0	0.0	0.0	0.000000	-0.033235	0.033235
1.7	0.0	0.0	0.0	0.0	0.000000	-0.028614	0.028614
1.8	0.0	0.0	0.0	0.0	0.000000	-0.021172	0.021172
1.9	0.0	0.0	0.0	0.0	0.000000	-0.011460	0.011460
2.1	0.0	0.0	0.0	0.0	0.0	0.018419	-0.018419
2.2	0.0	0.0	0.0	0.0	0.0	0.040915	-0.040915
2.3	0.0	0.0	0.0	0.0	0.0	0.066961	-0.066961
2.4	0.0	0.0	0.0	0.0	0.0	0.093719	-0.093719
2.5	0.0	0.0	0.0	0.0	0.0	0.115355	-0.115355
2.6	0.0	0.0	0.0	0.0	0.0	0.124691	-0.124691
2.7	0.0	0.0	0.0	0.0	0.0	0.116850	-0.116850
2.8	0.0	0.0	0.0	0.0	0.0	0.091391	-0.091391
2.9	0.0	0.0	0.0	0.0	0.0	0.051167	-0.051167
3.1	0.0	0.0	0.0	0.0	0.0	-0.044624	0.044624
3.2	0.0	0.0	0.0	0.0	0.0	-0.097697	0.097697
3.3	0.0	0.0	0.0	0.0	0.0	-0.161739	0.161739
3.4	0.0	0.0	0.0	0.0	0.0	-0.239408	0.239408
3.5	0.0	0.0	0.0	0.0	0.0	-0.332873	0.332873
3.6	0.0	0.0	0.0	0.0	0.0	-0.442918	0.442918
3.7	0.0	0.0	0.0	0.0	0.0	-0.568205	0.568205
3.8	0.0	0.0	0.0	0.0	0.0	-0.705462	0.705462
3.9	0.0	0.0	0.0	0.0	0.0	-0.850729	0.850729
AREA 1=	0.0	0.0	0.0	0.0	0.000000	-0.021861	0.021861
AREA 2=	0.0	0.0	0.0	0.0	0.0	0.097252	-0.097252
AREA 3=	0.0	0.0	0.0	0.0	0.0	-0.394365	0.394365

WYOMING HIGHWAY DEPARTMENT
BRIDGE DESIGN DIVISION

DATE
PAGE NO. 24

SAMPLE PROBLEM NO. 1 CONCRETE T GIRDER BRIDGE

740370PEKR9DES

INFLUENCE LINES

LOAD POINTS	M 3.6	M 3.7	M 3.8	M 3.9	M 4.0L	V 4.0L	R 4.0
8.1	0.0	0.0	0.0	0.0	-0.000000	0.007132	-0.007132
8.2	0.0	0.0	0.0	0.0	-0.000000	0.012750	-0.012750
8.3	0.0	0.0	0.0	0.0	-0.000000	0.016786	-0.016786
8.4	0.0	0.0	0.0	0.0	-0.000000	0.019178	-0.019178
8.5	0.0	0.0	0.0	0.0	-0.000000	0.019881	-0.019881
8.6	0.0	0.0	0.0	0.0	-0.000000	0.018878	-0.018878
8.7	0.0	0.0	0.0	0.0	-0.000000	0.016199	-0.016199
8.8	0.0	0.0	0.0	0.0	-0.000000	0.011956	-0.011956
8.9	0.0	0.0	0.0	0.0	-0.000000	0.006395	-0.006395
9.1	0.0	0.0	0.0	0.0	0.0	-0.024035	0.024035
9.2	0.0	0.0	0.0	0.0	0.0	-0.042967	0.042967
9.3	0.0	0.0	0.0	0.0	0.0	-0.056564	0.056564
9.4	0.0	0.0	0.0	0.0	0.0	-0.064625	0.064625
9.5	0.0	0.0	0.0	0.0	0.0	-0.066995	0.066995
9.6	0.0	0.0	0.0	0.0	0.0	-0.063615	0.063615
9.7	0.0	0.0	0.0	0.0	0.0	-0.054589	0.054589
9.8	0.0	0.0	0.0	0.0	0.0	-0.040288	0.040288
9.9	0.0	0.0	0.0	0.0	0.0	-0.021550	0.021550
AREA 8=	0.0	0.0	0.0	0.0	-0.000000	0.008337	-0.008337
AREA 9=	0.0	0.0	0.0	0.0	0.0	-0.028095	0.028095
SUM - =	0.0	0.0	0.0	0.0	-0.000000	-0.444321	0.444321
SUM + =	0.0	0.0	0.0	0.0	0.000000	0.105589	-0.105589
SUM TOT	0.0	0.0	0.0	0.0	0.000000	-0.338732	0.338732

WYOMING HIGHWAY DEPARTMENT
BRIDGE DESIGN DIVISION

DATE
PAGE NO. 25

SAMPLE PROBLEM NO. 1 CONCRETE T GIRDER BRIDGE 740370PEKR9DES

INFLUENCE LINES

LOAD POINTS	V 8.0R	M 8.0R	M 8.1	M 8.2	M 8.3	M 8.4	M 8.5
1.1	0.026368	-0.017021	0.0	0.0	0.0	0.0	0.0
1.2	0.050593	-0.032659	0.0	0.0	0.0	0.0	0.0
1.3	0.070533	-0.045530	0.0	0.0	0.0	0.0	0.0
1.4	0.084065	-0.054265	0.0	0.0	0.0	0.0	0.0
1.5	0.089441	-0.057736	0.0	0.0	0.0	0.0	0.0
1.6	0.085964	-0.055478	0.0	0.0	0.0	0.0	0.0
1.7	0.073993	-0.047764	0.0	0.0	0.0	0.0	0.0
1.8	0.054749	-0.035342	0.0	0.0	0.0	0.0	0.0
1.9	0.029636	-0.019130	0.0	0.0	0.0	0.0	0.0
2.1	-0.039265	0.025346	0.0	0.0	0.0	0.0	0.0
2.2	-0.070132	0.045271	0.0	0.0	0.0	0.0	0.0
2.3	-0.089668	0.057892	0.0	0.0	0.0	0.0	0.0
2.4	-0.095685	0.061766	0.0	0.0	0.0	0.0	0.0
2.5	-0.088521	0.057142	0.0	0.0	0.0	0.0	0.0
2.6	-0.071918	0.046424	0.0	0.0	0.0	0.0	0.0
2.7	-0.051384	0.033169	0.0	0.0	0.0	0.0	0.0
2.8	-0.031397	0.020267	0.0	0.0	0.0	0.0	0.0
2.9	-0.014134	0.009124	0.0	0.0	0.0	0.0	0.0
3.1	0.008794	-0.005677	0.0	0.0	0.0	0.0	0.0
3.2	0.016247	-0.010488	0.0	0.0	0.0	0.0	0.0
3.3	0.021958	-0.014174	0.0	0.0	0.0	0.0	0.0
3.4	0.025504	-0.016463	0.0	0.0	0.0	0.0	0.0
3.5	0.026542	-0.017133	0.0	0.0	0.0	0.0	0.0
3.6	0.024946	-0.016103	0.0	0.0	0.0	0.0	0.0
3.7	0.020931	-0.013511	0.0	0.0	0.0	0.0	0.0
3.8	0.015014	-0.009692	0.0	0.0	0.0	0.0	0.0
3.9	0.007825	-0.005051	0.0	0.0	0.0	0.0	0.0
AREA 1=	0.056532	-0.036493	0.0	0.0	0.0	0.0	0.0
AREA 2=	-0.074629	0.048174	0.0	0.0	0.0	0.0	0.0
AREA 3=	0.016776	-0.010829	0.0	0.0	0.0	0.0	0.0

SAMPLE PROBLEM NO. 1 CONCRETE T GIRDER BRIDGE 740370PEKR9DES

INFLUENCE LINES

LOAD POINTS	V 8.0R	M 8.0R	M 8.1	M 8.2	M 8.3	M 8.4	M 8.5
8.1	0.972179	-0.046593	0.0	0.0	0.0	0.0	0.0
8.2	0.929033	-0.083293	0.0	0.0	0.0	0.0	0.0
8.3	0.869869	-0.109653	0.0	0.0	0.0	0.0	0.0
8.4	0.794075	-0.125279	0.0	0.0	0.0	0.0	0.0
8.5	0.701192	-0.129873	0.0	0.0	0.0	0.0	0.0
8.6	0.591044	-0.123322	0.0	0.0	0.0	0.0	0.0
8.7	0.463936	-0.105823	0.0	0.0	0.0	0.0	0.0
8.8	0.320990	-0.078101	0.0	0.0	0.0	0.0	0.0
8.9	0.164717	-0.041776	0.0	0.0	0.0	0.0	0.0
9.1	0.005473	-0.003533	0.0	0.0	0.0	0.0	0.0
9.2	0.009784	-0.006316	0.0	0.0	0.0	0.0	0.0
9.3	0.012881	-0.008315	0.0	0.0	0.0	0.0	0.0
9.4	0.014717	-0.009500	0.0	0.0	0.0	0.0	0.0
9.5	0.015256	-0.009848	0.0	0.0	0.0	0.0	0.0
9.6	0.014487	-0.009351	0.0	0.0	0.0	0.0	0.0
9.7	0.012431	-0.008025	0.0	0.0	0.0	0.0	0.0
9.8	0.009175	-0.005922	0.0	0.0	0.0	0.0	0.0
9.9	0.004907	-0.003168	0.0	0.0	0.0	0.0	0.0
AREA 8=	0.407130	-0.054463	0.0	0.0	0.0	0.0	0.0
AREA 9=	0.006398	-0.004130	0.0	0.0	0.0	0.0	0.0
SUM - =	-0.074629	-0.105915	0.0	0.0	0.0	0.0	0.0
SUM + =	0.486836	0.048174	0.0	0.0	0.0	0.0	0.0
SUM TOT	0.412206	-0.057740	0.0	0.0	0.0	0.0	0.0

WYOMING HIGHWAY DEPARTMENT
BRIDGE DESIGN DIVISION

DATE
PAGE NO. 27

SAMPLE PROBLEM NO. 1 CONCRETE T GIRDER BRIDGE 740370PEKRODES

INFLUENCE LINES

LOAD POINTS	M 8.6	M 8.7	M 8.8	M 8.9	M 9.0L	V 9.0L	R 9.0
1.1	0.0	0.0	0.0	0.0	0.0	0.026368	-0.026368
1.2	0.0	0.0	0.0	0.0	0.0	0.050593	-0.050593
1.3	0.0	0.0	0.0	0.0	0.0	0.070533	-0.070533
1.4	0.0	0.0	0.0	0.0	0.0	0.084065	-0.084065
1.5	0.0	0.0	0.0	0.0	0.0	0.089441	-0.089441
1.6	0.0	0.0	0.0	0.0	0.0	0.085944	-0.085944
1.7	0.0	0.0	0.0	0.0	0.0	0.073993	-0.073993
1.8	0.0	0.0	0.0	0.0	0.0	0.054749	-0.054749
1.9	0.0	0.0	0.0	0.0	0.0	0.029636	-0.029636
2.1	0.0	0.0	0.0	0.0	0.0	-0.039265	0.039265
2.2	0.0	0.0	0.0	0.0	0.0	-0.070132	0.070132
2.3	0.0	0.0	0.0	0.0	0.0	-0.089668	0.089668
2.4	0.0	0.0	0.0	0.0	0.0	-0.095685	0.095685
2.5	0.0	0.0	0.0	0.0	0.0	-0.088521	0.088521
2.6	0.0	0.0	0.0	0.0	0.0	-0.071918	0.071918
2.7	0.0	0.0	0.0	0.0	0.0	-0.051384	0.051384
2.8	0.0	0.0	0.0	0.0	0.0	-0.031397	0.031397
2.9	0.0	0.0	0.0	0.0	0.0	-0.014134	0.014134
3.1	0.0	0.0	0.0	0.0	0.0	0.008794	-0.008794
3.2	0.0	0.0	0.0	0.0	0.0	0.016247	-0.016247
3.3	0.0	0.0	0.0	0.0	0.0	0.021958	-0.021958
3.4	0.0	0.0	0.0	0.0	0.0	0.025504	-0.025504
3.5	0.0	0.0	0.0	0.0	0.0	0.026542	-0.026542
3.6	0.0	0.0	0.0	0.0	0.0	0.024946	-0.024946
3.7	0.0	0.0	0.0	0.0	0.0	0.020931	-0.020931
3.8	0.0	0.0	0.0	0.0	0.0	0.015014	-0.015014
3.9	0.0	0.0	0.0	0.0	0.0	0.007825	-0.007825
AREA 1=	0.0	0.0	0.0	0.0	0.0	0.056532	-0.056532
AREA 2=	0.0	0.0	0.0	0.0	0.0	-0.074629	0.074629
AREA 3=	0.0	0.0	0.0	0.0	0.0	0.016776	-0.016776

SAMPLE PROBLEM NO. 1 CONCRETE T GIRDER BRIDGE 740370PEKR9DES

INFLUENCE LINES

LOAD POINTS	M 8.6	M 8.7	M 8.8	M 8.9	M 9.0L	V 9.0L	R 9.0
8.1	0.0	0.0	0.0	0.0	0.0	-0.027821	0.027821
8.2	0.0	0.0	0.0	0.0	0.0	-0.070967	0.070967
8.3	0.0	0.0	0.0	0.0	0.0	-0.130131	0.130131
8.4	0.0	0.0	0.0	0.0	0.0	-0.205925	0.205925
8.5	0.0	0.0	0.0	0.0	0.0	-0.298808	0.298808
8.6	0.0	0.0	0.0	0.0	0.0	-0.408956	0.408956
8.7	0.0	0.0	0.0	0.0	0.0	-0.536064	0.536064
8.8	0.0	0.0	0.0	0.0	0.0	-0.679010	0.679010
8.9	0.0	0.0	0.0	0.0	0.0	-0.835283	0.835283
9.1	0.0	0.0	0.0	0.0	0.0	0.005473	-0.005473
9.2	0.0	0.0	0.0	0.0	0.0	0.009784	-0.009784
9.3	0.0	0.0	0.0	0.0	0.0	0.012881	-0.012881
9.4	0.0	0.0	0.0	0.0	0.0	0.014717	-0.014717
9.5	0.0	0.0	0.0	0.0	0.0	0.015256	-0.015256
9.6	0.0	0.0	0.0	0.0	0.0	0.014487	-0.014487
9.7	0.0	0.0	0.0	0.0	0.0	0.012431	-0.012431
9.8	0.0	0.0	0.0	0.0	0.0	0.009175	-0.009175
9.9	0.0	0.0	0.0	0.0	0.0	0.004907	-0.004907
AREA 8=	0.0	0.0	0.0	0.0	0.0	-0.238387	0.238387
AREA 9=	0.0	0.0	0.0	0.0	0.0	0.006398	-0.006398
SUM - =	0.0	0.0	0.0	0.0	0.0	-0.313016	0.313016
SUM + =	0.0	0.0	0.0	0.0	0.0	0.079706	-0.079706
SUM TOT	0.0	0.0	0.0	0.0	0.0	-0.233310	0.233310

SAMPLE PROBLEM NO. 1 CONCRETE T GIRDER BRIDGE 740370PEKR9DES

INFLUENCE LINES

LOAD POINTS	V 9.0R	M 9.0R	M 9.1	M 9.2	M 9.3	M 9.4	M 9.5
1.1	-0.007825	0.005051	0.0	0.0	0.0	0.0	0.0
1.2	-0.015014	0.009692	0.0	0.0	0.0	0.0	0.0
1.3	-0.020931	0.013511	0.0	0.0	0.0	0.0	0.0
1.4	-0.024947	0.016103	0.0	0.0	0.0	0.0	0.0
1.5	-0.026542	0.017133	0.0	0.0	0.0	0.0	0.0
1.6	-0.025504	0.016463	0.0	0.0	0.0	0.0	0.0
1.7	-0.021958	0.014174	0.0	0.0	0.0	0.0	0.0
1.8	-0.016247	0.010488	0.0	0.0	0.0	0.0	0.0
1.9	-0.008795	0.005677	0.0	0.0	0.0	0.0	0.0
2.1	0.014135	-0.009124	0.0	0.0	0.0	0.0	0.0
2.2	0.031397	-0.020267	0.0	0.0	0.0	0.0	0.0
2.3	0.051385	-0.033170	0.0	0.0	0.0	0.0	0.0
2.4	0.071919	-0.046425	0.0	0.0	0.0	0.0	0.0
2.5	0.088522	-0.057142	0.0	0.0	0.0	0.0	0.0
2.6	0.095686	-0.061767	0.0	0.0	0.0	0.0	0.0
2.7	0.089669	-0.057883	0.0	0.0	0.0	0.0	0.0
2.8	0.070132	-0.045272	0.0	0.0	0.0	0.0	0.0
2.9	0.039265	-0.025346	0.0	0.0	0.0	0.0	0.0
3.1	-0.029636	0.019130	0.0	0.0	0.0	0.0	0.0
3.2	-0.054749	0.035342	0.0	0.0	0.0	0.0	0.0
3.3	-0.073993	0.047763	0.0	0.0	0.0	0.0	0.0
3.4	-0.085944	0.055478	0.0	0.0	0.0	0.0	0.0
3.5	-0.089441	0.057735	0.0	0.0	0.0	0.0	0.0
3.6	-0.084065	0.054265	0.0	0.0	0.0	0.0	0.0
3.7	-0.070532	0.045530	0.0	0.0	0.0	0.0	0.0
3.8	-0.050593	0.032659	0.0	0.0	0.0	0.0	0.0
3.9	-0.026368	0.017021	0.0	0.0	0.0	0.0	0.0
AREA 1=	-0.016776	0.010829	0.0	0.0	0.0	0.0	0.0
AREA 2=	0.074630	-0.048175	0.0	0.0	0.0	0.0	0.0
AREA 3=	-0.056532	0.036492	0.0	0.0	0.0	0.0	0.0

WYOMING HIGHWAY DEPARTMENT
BRIDGE DESIGN DIVISION

DATE
PAGE NO. 30

SAMPLE PROBLEM NO. 1 CONCRETE T GIRDER BRIDGE 740370PEKR9DES

INFLUENCE LINES

LOAD POINTS	V 9.0R	M 9.0R	M 9.1	M 9.2	M 9.3	M 9.4	M 9.5
8.1	0.005473	-0.003533	0.0	0.0	0.0	0.0	0.0
8.2	0.009784	-0.006316	0.0	0.0	0.0	0.0	0.0
8.3	0.012881	-0.008315	0.0	0.0	0.0	0.0	0.0
8.4	0.014717	-0.009500	0.0	0.0	0.0	0.0	0.0
8.5	0.015256	-0.009848	0.0	0.0	0.0	0.0	0.0
8.6	0.014487	-0.009351	0.0	0.0	0.0	0.0	0.0
8.7	0.012431	-0.008025	0.0	0.0	0.0	0.0	0.0
8.8	0.009175	-0.005922	0.0	0.0	0.0	0.0	0.0
8.9	0.004907	-0.003168	0.0	0.0	0.0	0.0	0.0
9.1	0.972179	-0.046593	0.0	0.0	0.0	0.0	0.0
9.2	0.929033	-0.083293	0.0	0.0	0.0	0.0	0.0
9.3	0.865869	-0.109653	0.0	0.0	0.0	0.0	0.0
9.4	0.794075	-0.125279	0.0	0.0	0.0	0.0	0.0
9.5	0.701192	-0.129873	0.0	0.0	0.0	0.0	0.0
9.6	0.591044	-0.123322	0.0	0.0	0.0	0.0	0.0
9.7	0.463936	-0.105923	0.0	0.0	0.0	0.0	0.0
9.8	0.320990	-0.078101	0.0	0.0	0.0	0.0	0.0
9.9	0.164717	-0.041776	0.0	0.0	0.0	0.0	0.0
AREA 8=	0.006398	-0.004130	0.0	0.0	0.0	0.0	0.0
AREA 9=	0.407130	-0.054463	0.0	0.0	0.0	0.0	0.0
SUM - =	-0.073308	-0.106768	0.0	0.0	0.0	0.0	0.0
SUM + =	0.488157	0.047322	0.0	0.0	0.0	0.0	0.0
SUM TOT	0.414849	-0.059446	0.0	0.0	0.0	0.0	0.0

SAMPLE PROBLEM NO. 1 CONCRETE T GIRDER BRIDGE 740370PEKR9DES

INFLUENCE LINES

LOAD POINTS	M 9.6	M 9.7	M 9.8	M 9.9	M10.0L	V10.0L	R10.0
1.1	0.0	0.0	0.0	0.0	0.0	-0.007825	0.007825
1.2	0.0	0.0	0.0	0.0	0.0	-0.015014	0.015014
1.3	0.0	0.0	0.0	0.0	0.0	-0.020931	0.020931
1.4	0.0	0.0	0.0	0.0	0.0	-0.024947	0.024947
1.5	0.0	0.0	0.0	0.0	0.0	-0.026542	0.026542
1.6	0.0	0.0	0.0	0.0	0.0	-0.025504	0.025504
1.7	0.0	0.0	0.0	0.0	0.0	-0.021958	0.021958
1.8	0.0	0.0	0.0	0.0	0.0	-0.016247	0.016247
1.9	0.0	0.0	0.0	0.0	0.0	-0.008795	0.008795
2.1	0.0	0.0	0.0	0.0	0.0	0.014135	-0.014135
2.2	0.0	0.0	0.0	0.0	0.0	0.031397	-0.031397
2.3	0.0	0.0	0.0	0.0	0.0	0.051385	-0.051385
2.4	0.0	0.0	0.0	0.0	0.0	0.071919	-0.071919
2.5	0.0	0.0	0.0	0.0	0.0	0.088522	-0.088522
2.6	0.0	0.0	0.0	0.0	0.0	0.095686	-0.095686
2.7	0.0	0.0	0.0	0.0	0.0	0.089669	-0.089669
2.8	0.0	0.0	0.0	0.0	0.0	0.070132	-0.070132
2.9	0.0	0.0	0.0	0.0	0.0	0.039265	-0.039265
3.1	0.0	0.0	0.0	0.0	0.0	-0.029636	0.029636
3.2	0.0	0.0	0.0	0.0	0.0	-0.054749	0.054749
3.3	0.0	0.0	0.0	0.0	0.0	-0.073993	0.073993
3.4	0.0	0.0	0.0	0.0	0.0	-0.085944	0.085944
3.5	0.0	0.0	0.0	0.0	0.0	-0.089441	0.089441
3.6	0.0	0.0	0.0	0.0	0.0	-0.084065	0.084065
3.7	0.0	0.0	0.0	0.0	0.0	-0.070532	0.070532
3.8	0.0	0.0	0.0	0.0	0.0	-0.050593	0.050593
3.9	0.0	0.0	0.0	0.0	0.0	-0.026368	0.026368
AREA 1=	0.0	0.0	0.0	0.0	0.0	-0.016776	0.016776
AREA 2=	0.0	0.0	0.0	0.0	0.0	0.074630	-0.074630
AREA 3=	0.0	0.0	0.0	0.0	0.0	-0.056532	0.056532

WYOMING HIGHWAY DEPARTMENT
BRIDGE DESIGN DIVISION

DATE
PAGE NO. 32

SAMPLE PROBLEM NO. 1 CONCRETE T GIRDER BRIDGE 740370PEKR9DES

INFLUENCE LINES

LOAD POINTS	M 9.6	M 9.7	M 9.8	M 9.9	M10.0L	V10.0L	R10.0
8.1	0.0	0.0	0.0	0.0	0.0	0.005473	-0.005473
8.2	0.0	0.0	0.0	0.0	0.0	0.009784	-0.009784
8.3	0.0	0.0	0.0	0.0	0.0	0.012881	-0.012881
8.4	0.0	0.0	0.0	0.0	0.0	0.014717	-0.014717
8.5	0.0	0.0	0.0	0.0	0.0	0.015256	-0.015256
8.6	0.0	0.0	0.0	0.0	0.0	0.014487	-0.014487
8.7	0.0	0.0	0.0	0.0	0.0	0.012431	-0.012431
8.8	0.0	0.0	0.0	0.0	0.0	0.009175	-0.009175
8.9	0.0	0.0	0.0	0.0	0.0	0.004907	-0.004907
9.1	0.0	0.0	0.0	0.0	0.0	-0.027821	0.027821
9.2	0.0	0.0	0.0	0.0	0.0	-0.070967	0.070967
9.3	0.0	0.0	0.0	0.0	0.0	-0.130131	0.130131
9.4	0.0	0.0	0.0	0.0	0.0	-0.205925	0.205925
9.5	0.0	0.0	0.0	0.0	0.0	-0.298808	0.298808
9.6	0.0	0.0	0.0	0.0	0.0	-0.408956	0.408956
9.7	0.0	0.0	0.0	0.0	0.0	-0.536064	0.536064
9.8	0.0	0.0	0.0	0.0	0.0	-0.679010	0.679010
9.9	0.0	0.0	0.0	0.0	0.0	-0.835283	0.835283
AREA 8=	0.0	0.0	0.0	0.0	0.0	0.006398	-0.006398
AREA 9=	0.0	0.0	0.0	0.0	0.0	-0.238387	0.238387
SUM - =	0.0	0.0	0.0	0.0	0.0	-0.311695	0.311695
SUM + =	0.0	0.0	0.0	0.0	0.0	0.081028	-0.081028
SUM TOT	0.0	0.0	0.0	0.0	0.0	-0.230668	0.230668

WYOMING HIGHWAY DEPARTMENT
BRIDGE DIVISION
TENTH POINT SHEARS INFLUENCE LINES

DATE
PAGE NO. 32

SAMPLE PROBLEM NO. 1 CONCRETE T GIRDER BRIDGE 740370PEKR9DES

LOAD POINT	V 1.1	V 1.2	V 1.3	V 1.4	V 1.5	V 1.6	V 1.7	V 1.8	V 1.9
1.0	0.0	0.0	0.0	0.0	0.0	0.0	0.0	0.0	0.0
1.1	0.85073	-0.14927	-0.14927	-0.14927	-0.14927	-0.14927	-0.14927	-0.14927	-0.14927
1.2	0.70546	0.70546	-0.29454	-0.29454	-0.29454	-0.29454	-0.29454	-0.29454	-0.29454
1.3	0.56821	0.56821	0.56821	-0.43179	-0.43179	-0.43179	-0.43179	-0.43179	-0.43179
1.4	0.44292	0.44292	0.44292	-0.55708	-0.55708	-0.55708	-0.55708	-0.55708	-0.55708
1.5	0.33287	0.33287	0.33287	0.33287	-0.66713	-0.66713	-0.66713	-0.66713	-0.66713
1.6	0.23941	0.23941	0.23941	0.23941	0.23941	-0.76059	-0.76059	-0.76059	-0.76059
1.7	0.16174	0.16174	0.16174	0.16174	0.16174	0.16174	-0.83826	-0.83826	-0.83826
1.8	0.09770	0.09770	0.09770	0.09770	0.09770	0.09770	0.09770	-0.90230	-0.90230
1.9	0.04462	0.04462	0.04462	0.04462	0.04462	0.04462	0.04462	0.04462	-0.95538
2.0	0.0	0.0	0.0	0.0	0.0	0.0	0.0	0.0	0.0
2.1	-0.05117	-0.05117	-0.05117	-0.05117	-0.05117	-0.05117	-0.05117	-0.05117	-0.05117
2.2	-0.09139	-0.09139	-0.09139	-0.09139	-0.09139	-0.09139	-0.09139	-0.09139	-0.09139
2.3	-0.11685	-0.11685	-0.11685	-0.11685	-0.11685	-0.11685	-0.11685	-0.11685	-0.11685
2.4	-0.12469	-0.12469	-0.12469	-0.12469	-0.12469	-0.12469	-0.12469	-0.12469	-0.12469
2.5	-0.11535	-0.11535	-0.11535	-0.11535	-0.11535	-0.11535	-0.11535	-0.11535	-0.11535
2.6	-0.09372	-0.09372	-0.09372	-0.09372	-0.09372	-0.09372	-0.09372	-0.09372	-0.09372
2.7	-0.06696	-0.06696	-0.06696	-0.06696	-0.06696	-0.06696	-0.06696	-0.06696	-0.06696
2.8	-0.04091	-0.04091	-0.04091	-0.04091	-0.04091	-0.04091	-0.04091	-0.04091	-0.04091
2.9	-0.01842	-0.01842	-0.01842	-0.01842	-0.01842	-0.01842	-0.01842	-0.01842	-0.01842
3.0	0.0	0.0	0.0	0.0	0.0	0.0	0.0	0.0	0.0
3.1	0.01146	0.01146	0.01146	0.01146	0.01146	0.01146	0.01146	0.01146	0.01146
3.2	0.02117	0.02117	0.02117	0.02117	0.02117	0.02117	0.02117	0.02117	0.02117
3.3	0.02861	0.02861	0.02861	0.02861	0.02861	0.02861	0.02861	0.02861	0.02861
3.4	0.03324	0.03324	0.03324	0.03324	0.03324	0.03324	0.03324	0.03324	0.03324
3.5	0.03459	0.03459	0.03459	0.03459	0.03459	0.03459	0.03459	0.03459	0.03459
3.6	0.03251	0.03251	0.03251	0.03251	0.03251	0.03251	0.03251	0.03251	0.03251
3.7	0.02728	0.02728	0.02728	0.02728	0.02728	0.02728	0.02728	0.02728	0.02728
3.8	0.01956	0.01956	0.01956	0.01956	0.01956	0.01956	0.01956	0.01956	0.01956
3.9	0.01020	0.01020	0.01020	0.01020	0.01020	0.01020	0.01020	0.01020	0.01020
AREA 1=	0.29437	0.19437	0.09437	-0.00563	-0.10563	-0.20563	-0.30563	-0.40563	-0.50563
1ST AREA=	-0.00746	-0.02965	-0.06597	-0.11541	-0.17662	-0.24801	-0.32795	-0.41498	-0.50786
AREA 2=	-0.09725	-0.09725	-0.09725	-0.09725	-0.09725	-0.09725	-0.09725	-0.09725	-0.09725
AREA 3=	0.02186	0.02186	0.02186	0.02186	0.02186	0.02186	0.02186	0.02186	0.02186

WYOMING HIGHWAY DEPARTMENT
BRIDGE DIVISION
TENTH POINT SHEARS INFLUENCE LINES

DATE
PAGE NO. 33

SAMPLE PROBLEM NO. 1 CONCRETE T GIRDER BRIDGE 740370PEKR9DES

LOAD POINT	V 1.1	V 1.2	V 1.3	V 1.4	V 1.5	V 1.6	V 1.7	V 1.8	V 1.9
8.0	0.0	0.0	0.0	0.0	0.0	0.0	0.0	0.0	0.0
8.1	-0.02404	-0.02404	-0.02404	-0.02404	-0.02404	-0.02404	-0.02404	-0.02404	-0.02404
8.2	-0.04297	-0.04297	-0.04297	-0.04297	-0.04297	-0.04297	-0.04297	-0.04297	-0.04297
8.3	-0.05656	-0.05656	-0.05656	-0.05656	-0.05656	-0.05656	-0.05656	-0.05656	-0.05656
8.4	-0.06463	-0.06463	-0.06463	-0.06463	-0.06463	-0.06463	-0.06463	-0.06463	-0.06463
8.5	-0.06700	-0.06700	-0.06700	-0.06700	-0.06700	-0.06700	-0.06700	-0.06700	-0.06700
8.6	-0.06362	-0.06362	-0.06362	-0.06362	-0.06362	-0.06362	-0.06362	-0.06362	-0.06362
8.7	-0.05459	-0.05459	-0.05459	-0.05459	-0.05459	-0.05459	-0.05459	-0.05459	-0.05459
8.8	-0.04029	-0.04029	-0.04029	-0.04029	-0.04029	-0.04029	-0.04029	-0.04029	-0.04029
8.9	-0.02155	-0.02155	-0.02155	-0.02155	-0.02155	-0.02155	-0.02155	-0.02155	-0.02155
9.0	0.0	0.0	0.0	0.0	0.0	0.0	0.0	0.0	0.0
9.1	0.00713	0.00713	0.00713	0.00713	0.00713	0.00713	0.00713	0.00713	0.00713
9.2	0.01275	0.01275	0.01275	0.01275	0.01275	0.01275	0.01275	0.01275	0.01275
9.3	0.01679	0.01679	0.01679	0.01679	0.01679	0.01679	0.01679	0.01679	0.01679
9.4	0.01918	0.01918	0.01918	0.01918	0.01918	0.01918	0.01918	0.01918	0.01918
9.5	0.01988	0.01988	0.01988	0.01988	0.01988	0.01988	0.01988	0.01988	0.01988
9.6	0.01888	0.01888	0.01888	0.01888	0.01888	0.01888	0.01888	0.01888	0.01888
9.7	0.01620	0.01620	0.01620	0.01620	0.01620	0.01620	0.01620	0.01620	0.01620
9.8	0.01196	0.01196	0.01196	0.01196	0.01196	0.01196	0.01196	0.01196	0.01196
9.9	0.00640	0.00640	0.00640	0.00640	0.00640	0.00640	0.00640	0.00640	0.00640
AREA R=	-0.02809	-0.02809	-0.02809	-0.02809	-0.02809	-0.02809	-0.02809	-0.02809	-0.02809
AREA Q=	0.00834	0.00834	0.00834	0.00834	0.00834	0.00834	0.00834	0.00834	0.00834
SUM -	-0.13231	-0.15500	-0.19132	-0.24076	-0.30197	-0.37336	-0.45330	-0.54033	-0.6334
SUM +	0.33203	0.25422	0.19053	0.13998	0.10119	0.07258	0.05252	0.03955	0.0324
SUM T	0.19922	0.09922	-0.00078	-0.10078	-0.20078	-0.30078	-0.40078	-0.50078	-0.600

WYOMING HIGHWAY DEPARTMENT
BRIDGE DIVISION
TENTH POINT SHEARS INFLUENCE LINES

DATE
PAGE NO. 34

SAMPLE PROBLEM NO. 1 CONCRETE T GIRDER BRIDGE 740370PEKR9DES

LOAD POINT	V 2.1	V 2.2	V 2.3	V 2.4	V 2.5	V 2.6	V 2.7	V 2.8	V 2.9
1.0	0.0	0.0	0.0	0.0	0.0	0.0	0.0	0.0	0.0
1.1	0.03514	0.03514	0.03514	0.03514	0.03514	0.03514	0.03514	0.03514	0.03514
1.2	0.06742	0.06742	0.06742	0.06742	0.06742	0.06742	0.06742	0.06742	0.06742
1.3	0.09399	0.09399	0.09399	0.09399	0.09399	0.09399	0.09399	0.09399	0.09399
1.4	0.11203	0.11203	0.11203	0.11203	0.11203	0.11203	0.11203	0.11203	0.11203
1.5	0.11919	0.11919	0.11919	0.11919	0.11919	0.11919	0.11919	0.11919	0.11919
1.6	0.11453	0.11453	0.11453	0.11453	0.11453	0.11453	0.11453	0.11453	0.11453
1.7	0.09860	0.09860	0.09860	0.09860	0.09860	0.09860	0.09860	0.09860	0.09860
1.8	0.07296	0.07296	0.07296	0.07296	0.07296	0.07296	0.07296	0.07296	0.07296
1.9	0.03949	0.03949	0.03949	0.03949	0.03949	0.03949	0.03949	0.03949	0.03949
2.0	0.0	0.0	0.0	0.0	0.0	0.0	0.0	0.0	0.0
2.1	0.93623	-0.06377	-0.06377	-0.06377	-0.06377	-0.06377	-0.06377	-0.06377	-0.06377
2.2	0.85584	0.85584	-0.14416	-0.14416	-0.14416	-0.14416	-0.14416	-0.14416	-0.14416
2.3	0.75519	0.75519	0.75519	-0.24481	-0.24481	-0.24481	-0.24481	-0.24481	-0.24481
2.4	0.63426	0.63426	0.63426	0.63426	-0.36574	-0.36574	-0.36574	-0.36574	-0.36574
2.5	0.50000	0.50000	0.50000	0.50000	-0.50000	-0.50000	-0.50000	-0.50000	-0.50000
2.6	0.36574	0.36574	0.36574	0.36574	0.36574	-0.63426	-0.63426	-0.63426	-0.63426
2.7	0.24481	0.24481	0.24481	0.24481	0.24481	0.24481	-0.75519	-0.75519	-0.75519
2.8	0.14416	0.14416	0.14416	0.14416	0.14416	0.14416	0.14416	-0.85584	-0.85584
2.9	0.06377	0.06377	0.06377	0.06377	0.06377	0.06377	0.06377	0.06377	-0.93623
3.0	0.0	0.0	0.0	0.0	0.0	0.0	0.0	0.0	0.0
3.1	-0.03949	-0.03949	-0.03949	-0.03949	-0.03949	-0.03949	-0.03949	-0.03949	-0.03949
3.2	-0.07296	-0.07296	-0.07296	-0.07296	-0.07296	-0.07296	-0.07296	-0.07296	-0.07296
3.3	-0.09860	-0.09860	-0.09860	-0.09860	-0.09860	-0.09860	-0.09860	-0.09860	-0.09860
3.4	-0.11453	-0.11453	-0.11453	-0.11453	-0.11453	-0.11453	-0.11453	-0.11453	-0.11453
3.5	-0.11919	-0.11919	-0.11919	-0.11919	-0.11919	-0.11919	-0.11919	-0.11919	-0.11919
3.6	-0.11203	-0.11203	-0.11203	-0.11203	-0.11203	-0.11203	-0.11203	-0.11203	-0.11203
3.7	-0.09399	-0.09399	-0.09399	-0.09399	-0.09399	-0.09399	-0.09399	-0.09399	-0.09399
3.8	-0.06742	-0.06742	-0.06742	-0.06742	-0.06742	-0.06742	-0.06742	-0.06742	-0.06742
3.9	-0.03514	-0.03514	-0.03514	-0.03514	-0.03514	-0.03514	-0.03514	-0.03514	-0.03514
AREA 1=	0.07534	0.07534	0.07534	0.07534	0.07534	0.07534	0.07534	0.07534	0.07534
AREA 2=	0.40000	0.30000	0.20000	0.10000	-0.00000	-0.10000	-0.20000	-0.30000	-0.40000
1ST AREA=	-0.00319	-0.01359	-0.03303	-0.06356	-0.10685	-0.16356	-0.23303	-0.31359	-0.40319
AREA 3=	-0.07534	-0.07534	-0.07534	-0.07534	-0.07534	-0.07534	-0.07534	-0.07534	-0.07534

WYOMING HIGHWAY DEPARTMENT
BRIDGE DIVISION
TENTH POINT SHEARS INFLUENCE LINES

DATE
PAGE NO. 35

SAMPLE PROBLEM NO. 1 CONCRETE T GIRDER BRIDGE 740370PEKR9DES

LOAD POINT	V 2.1	V 2.2	V 2.3	V 2.4	V 2.5	V 2.6	V 2.7	V 2.8	V 2.9
8.0	0.0	0.0	0.0	0.0	0.0	0.0	0.0	0.0	0.0
8.1	-0.02458	-0.02458	-0.02458	-0.02458	-0.02458	-0.02458	-0.02458	-0.02458	-0.02458
8.2	-0.04394	-0.04394	-0.04394	-0.04394	-0.04394	-0.04394	-0.04394	-0.04394	-0.04394
8.3	-0.05784	-0.05784	-0.05784	-0.05784	-0.05784	-0.05784	-0.05784	-0.05784	-0.05784
8.4	-0.06609	-0.06609	-0.06609	-0.06609	-0.06609	-0.06609	-0.06609	-0.06609	-0.06609
8.5	-0.06851	-0.06851	-0.06851	-0.06851	-0.06851	-0.06851	-0.06851	-0.06851	-0.06851
8.6	-0.06505	-0.06505	-0.06505	-0.06505	-0.06505	-0.06505	-0.06505	-0.06505	-0.06505
8.7	-0.05582	-0.05582	-0.05582	-0.05582	-0.05582	-0.05582	-0.05582	-0.05582	-0.05582
8.8	-0.04120	-0.04120	-0.04120	-0.04120	-0.04120	-0.04120	-0.04120	-0.04120	-0.04120
8.9	-0.02204	-0.02204	-0.02204	-0.02204	-0.02204	-0.02204	-0.02204	-0.02204	-0.02204
9.0	0.0	0.0	0.0	0.0	0.0	0.0	0.0	0.0	0.0
9.1	-0.02458	-0.02458	-0.02458	-0.02458	-0.02458	-0.02458	-0.02458	-0.02458	-0.02458
9.2	-0.04394	-0.04394	-0.04394	-0.04394	-0.04394	-0.04394	-0.04394	-0.04394	-0.04394
9.3	-0.05784	-0.05784	-0.05784	-0.05784	-0.05784	-0.05784	-0.05784	-0.05784	-0.05784
9.4	-0.06609	-0.06609	-0.06609	-0.06609	-0.06609	-0.06609	-0.06609	-0.06609	-0.06609
9.5	-0.06851	-0.06851	-0.06851	-0.06851	-0.06851	-0.06851	-0.06851	-0.06851	-0.06851
9.6	-0.06505	-0.06505	-0.06505	-0.06505	-0.06505	-0.06505	-0.06505	-0.06505	-0.06505
9.7	-0.05582	-0.05582	-0.05582	-0.05582	-0.05582	-0.05582	-0.05582	-0.05582	-0.05582
9.8	-0.04120	-0.04120	-0.04120	-0.04120	-0.04120	-0.04120	-0.04120	-0.04120	-0.04120
9.9	-0.02204	-0.02204	-0.02204	-0.02204	-0.02204	-0.02204	-0.02204	-0.02204	-0.02204
AREA R=	-0.02873	-0.02873	-0.02873	-0.02873	-0.02873	-0.02873	-0.02873	-0.02873	-0.02873
AREA Q=	-0.02873	-0.02873	-0.02873	-0.02873	-0.02873	-0.02873	-0.02873	-0.02873	-0.02873
SUM -	-0.13598	-0.14638	-0.16583	-0.19636	-0.23964	-0.29636	-0.36583	-0.44638	-0.5359
SUM +	0.47852	0.38892	0.30837	0.23890	0.18218	0.13890	0.10837	0.08892	0.0785
SUM T	0.34254	0.24254	0.14254	0.04254	-0.05746	-0.15746	-0.25746	-0.35746	-0.4574

WYOMING HIGHWAY DEPARTMENT
BRIDGE DIVISION
TENTH POINT SHEARS INFLUENCE LINES

DATE
PAGE NO. 36

SAMPLE PROBLEM NO. 1 CONCRETE T GIRDER BRIDGE 740370PEKRODES

LOAD POINT	V 3.1	V 3.2	V 3.3	V 3.4	V 3.5	V 3.6	V 3.7	V 3.8	V 3.9
1.0	0.0	0.0	0.0	0.0	0.0	0.0	0.0	0.0	0.0
1.1	-0.01020	-0.01020	-0.01020	-0.01020	-0.01020	-0.01020	-0.01020	-0.01020	-0.01020
1.2	-0.01956	-0.01956	-0.01956	-0.01956	-0.01956	-0.01956	-0.01956	-0.01956	-0.01956
1.3	-0.02728	-0.02728	-0.02728	-0.02728	-0.02728	-0.02728	-0.02728	-0.02728	-0.02728
1.4	-0.03251	-0.03251	-0.03251	-0.03251	-0.03251	-0.03251	-0.03251	-0.03251	-0.03251
1.5	-0.03459	-0.03459	-0.03459	-0.03459	-0.03459	-0.03459	-0.03459	-0.03459	-0.03459
1.6	-0.03324	-0.03324	-0.03324	-0.03324	-0.03324	-0.03324	-0.03324	-0.03324	-0.03324
1.7	-0.02861	-0.02861	-0.02861	-0.02861	-0.02861	-0.02861	-0.02861	-0.02861	-0.02861
1.8	-0.02117	-0.02117	-0.02117	-0.02117	-0.02117	-0.02117	-0.02117	-0.02117	-0.02117
1.9	-0.01146	-0.01146	-0.01146	-0.01146	-0.01146	-0.01146	-0.01146	-0.01146	-0.01146
2.0	0.0	0.0	0.0	0.0	0.0	0.0	0.0	0.0	0.0
2.1	0.01842	0.01842	0.01842	0.01842	0.01842	0.01842	0.01842	0.01842	0.01842
2.2	0.04091	0.04091	0.04091	0.04091	0.04091	0.04091	0.04091	0.04091	0.04091
2.3	0.06696	0.06696	0.06696	0.06696	0.06696	0.06696	0.06696	0.06696	0.06696
2.4	0.09372	0.09372	0.09372	0.09372	0.09372	0.09372	0.09372	0.09372	0.09372
2.5	0.11536	0.11536	0.11536	0.11536	0.11536	0.11536	0.11536	0.11536	0.11536
2.6	0.12469	0.12469	0.12469	0.12469	0.12469	0.12469	0.12469	0.12469	0.12469
2.7	0.11685	0.11685	0.11685	0.11685	0.11685	0.11685	0.11685	0.11685	0.11685
2.8	0.09139	0.09139	0.09139	0.09139	0.09139	0.09139	0.09139	0.09139	0.09139
2.9	0.05117	0.05117	0.05117	0.05117	0.05117	0.05117	0.05117	0.05117	0.05117
3.0	0.0	0.0	0.0	0.0	0.0	0.0	0.0	0.0	0.0
3.1	0.95538	-0.04462	-0.04462	-0.04462	-0.04462	-0.04462	-0.04462	-0.04462	-0.04462
3.2	0.90230	0.90230	-0.09770	-0.09770	-0.09770	-0.09770	-0.09770	-0.09770	-0.09770
3.3	0.83826	0.83826	0.83826	-0.16174	-0.16174	-0.16174	-0.16174	-0.16174	-0.16174
3.4	0.76059	0.76059	0.76059	0.76059	-0.23941	-0.23941	-0.23941	-0.23941	-0.23941
3.5	0.66713	0.66713	0.66713	0.66713	0.66713	-0.33287	-0.33287	-0.33287	-0.33287
3.6	0.55708	0.55708	0.55708	0.55708	0.55708	0.55708	-0.44292	-0.44292	-0.44292
3.7	0.43180	0.43180	0.43180	0.43180	0.43180	0.43180	0.43180	-0.56820	-0.56820
3.8	0.29454	0.29454	0.29454	0.29454	0.29454	0.29454	0.29454	0.29454	-0.70546
3.9	0.14927	0.14927	0.14927	0.14927	0.14927	0.14927	0.14927	0.14927	-0.85073
AREA 1=	-0.02186	-0.02186	-0.02186	-0.02186	-0.02186	-0.02186	-0.02186	-0.02186	-0.02186
AREA 2=	0.09725	0.09725	0.09725	0.09725	0.09725	0.09725	0.09725	0.09725	0.09725
AREA 3=	0.50563	0.40563	0.30563	0.20563	0.10563	0.00563	-0.09437	-0.19437	-0.29437
1ST AREA=	-0.00223	-0.00935	-0.02232	-0.04238	-0.07099	-0.10978	-0.16034	-0.22402	-0.30183

WYOMING HIGHWAY DEPARTMENT
BRIDGE DIVISION
TENTH POINT SHEARS INFLUENCE LINES

DATE
PAGE NO. 37

SAMPLE PROBLEM NO. 1 CONCRETE T GIRDER BRIDGE 740370PEKR9DES

LOAD POINT	V 3.1	V 3.2	V 3.3	V 3.4	V 3.5	V 3.6	V 3.7	V 3.8	V 3.9
8.0	0.0	0.0	0.0	0.0	0.0	0.0	0.0	0.0	0.0
8.1	0.00713	0.00713	0.00713	0.00713	0.00713	0.00713	0.00713	0.00713	0.00713
8.2	0.01275	0.01275	0.01275	0.01275	0.01275	0.01275	0.01275	0.01275	0.01275
8.3	0.01679	0.01679	0.01679	0.01679	0.01679	0.01679	0.01679	0.01679	0.01679
8.4	0.01918	0.01918	0.01918	0.01918	0.01918	0.01918	0.01918	0.01918	0.01918
8.5	0.01988	0.01988	0.01988	0.01988	0.01988	0.01988	0.01988	0.01988	0.01988
8.6	0.01888	0.01888	0.01888	0.01888	0.01888	0.01888	0.01888	0.01888	0.01888
8.7	0.01620	0.01620	0.01620	0.01620	0.01620	0.01620	0.01620	0.01620	0.01620
8.8	0.01196	0.01196	0.01196	0.01196	0.01196	0.01196	0.01196	0.01196	0.01196
8.9	0.00639	0.00639	0.00639	0.00639	0.00639	0.00639	0.00639	0.00639	0.00639
9.0	0.0	0.0	0.0	0.0	0.0	0.0	0.0	0.0	0.0
9.1	-0.02403	-0.02403	-0.02403	-0.02403	-0.02403	-0.02403	-0.02403	-0.02403	-0.02403
9.2	-0.04297	-0.04297	-0.04297	-0.04297	-0.04297	-0.04297	-0.04297	-0.04297	-0.04297
9.3	-0.05656	-0.05656	-0.05656	-0.05656	-0.05656	-0.05656	-0.05656	-0.05656	-0.05656
9.4	-0.06462	-0.06462	-0.06462	-0.06462	-0.06462	-0.06462	-0.06462	-0.06462	-0.06462
9.5	-0.06699	-0.06699	-0.06699	-0.06699	-0.06699	-0.06699	-0.06699	-0.06699	-0.06699
9.6	-0.06362	-0.06362	-0.06362	-0.06362	-0.06362	-0.06362	-0.06362	-0.06362	-0.06362
9.7	-0.05459	-0.05459	-0.05459	-0.05459	-0.05459	-0.05459	-0.05459	-0.05459	-0.05459
9.8	-0.04029	-0.04029	-0.04029	-0.04029	-0.04029	-0.04029	-0.04029	-0.04029	-0.04029
9.9	-0.02155	-0.02155	-0.02155	-0.02155	-0.02155	-0.02155	-0.02155	-0.02155	-0.02155
AREA 8=	0.00834	0.00834	0.00834	0.00834	0.00834	0.00834	0.00834	0.00834	0.00834
AREA 9=	-0.02809	-0.02809	-0.02809	-0.02809	-0.02809	-0.02809	-0.02809	-0.02809	-0.02809
SUM -	-0.05219	-0.05930	-0.07228	-0.09233	-0.12095	-0.15974	-0.21029	-0.27398	-0.35
SUM +	0.61345	0.52057	0.43354	0.35360	0.28221	0.22100	0.17156	0.13524	0.11
SUM T	0.56127	0.46127	0.36127	0.26127	0.16127	0.06127	-0.03873	-0.13873	-0.23

WYOMING HIGHWAY DEPARTMENT
BRIDGE DIVISION
TENTH POINT SHEARS INFLUENCE LINES

DATE

SAMPLE PROBLEM NO. 1 CONCRETE T GIRDER BRIDGE 740370PEKR9DES

LOAD POINT	V 8.1	V 8.2	V 8.3	V 8.4	V 8.5	V 8.6	V 8.7	V 8.8	V 8.9
1.0	0.0	0.0	0.0	0.0	0.0	0.0	0.0	0.0	0.0
1.1	0.02637	0.02637	0.02637	0.02637	0.02637	0.02637	0.02637	0.02637	0.02637
1.2	0.05059	0.05059	0.05059	0.05059	0.05059	0.05059	0.05059	0.05059	0.05059
1.3	0.07053	0.07053	0.07053	0.07053	0.07053	0.07053	0.07053	0.07053	0.07053
1.4	0.08407	0.08407	0.08407	0.08407	0.08407	0.08407	0.08407	0.08407	0.08407
1.5	0.08944	0.08944	0.08944	0.08944	0.08944	0.08944	0.08944	0.08944	0.08944
1.6	0.08594	0.08594	0.08594	0.08594	0.08594	0.08594	0.08594	0.08594	0.08594
1.7	0.07399	0.07399	0.07399	0.07399	0.07399	0.07399	0.07399	0.07399	0.07399
1.8	0.05475	0.05475	0.05475	0.05475	0.05475	0.05475	0.05475	0.05475	0.05475
1.9	0.02964	0.02964	0.02964	0.02964	0.02964	0.02964	0.02964	0.02964	0.02964
2.0	0.0	0.0	0.0	0.0	0.0	0.0	0.0	0.0	0.0
2.1	-0.03926	-0.03926	-0.03926	-0.03926	-0.03926	-0.03926	-0.03926	-0.03926	-0.03926
2.2	-0.07013	-0.07013	-0.07013	-0.07013	-0.07013	-0.07013	-0.07013	-0.07013	-0.07013
2.3	-0.08967	-0.08967	-0.08967	-0.08967	-0.08967	-0.08967	-0.08967	-0.08967	-0.08967
2.4	-0.09568	-0.09568	-0.09568	-0.09568	-0.09568	-0.09568	-0.09568	-0.09568	-0.09568
2.5	-0.08852	-0.08852	-0.08852	-0.08852	-0.08852	-0.08852	-0.08852	-0.08852	-0.08852
2.6	-0.07192	-0.07192	-0.07192	-0.07192	-0.07192	-0.07192	-0.07192	-0.07192	-0.07192
2.7	-0.05138	-0.05138	-0.05138	-0.05138	-0.05138	-0.05138	-0.05138	-0.05138	-0.05138
2.8	-0.03140	-0.03140	-0.03140	-0.03140	-0.03140	-0.03140	-0.03140	-0.03140	-0.03140
2.9	-0.01413	-0.01413	-0.01413	-0.01413	-0.01413	-0.01413	-0.01413	-0.01413	-0.01413
3.0	0.0	0.0	0.0	0.0	0.0	0.0	0.0	0.0	0.0
3.1	0.00879	0.00879	0.00879	0.00879	0.00879	0.00879	0.00879	0.00879	0.00879
3.2	0.01625	0.01625	0.01625	0.01625	0.01625	0.01625	0.01625	0.01625	0.01625
3.3	0.02196	0.02196	0.02196	0.02196	0.02196	0.02196	0.02196	0.02196	0.02196
3.4	0.02550	0.02550	0.02550	0.02550	0.02550	0.02550	0.02550	0.02550	0.02550
3.5	0.02654	0.02654	0.02654	0.02654	0.02654	0.02654	0.02654	0.02654	0.02654
3.6	0.02495	0.02495	0.02495	0.02495	0.02495	0.02495	0.02495	0.02495	0.02495
3.7	0.02093	0.02093	0.02093	0.02093	0.02093	0.02093	0.02093	0.02093	0.02093
3.8	0.01501	0.01501	0.01501	0.01501	0.01501	0.01501	0.01501	0.01501	0.01501
3.9	0.00782	0.00782	0.00782	0.00782	0.00782	0.00782	0.00782	0.00782	0.00782
AREA 1=	0.05653	0.05653	0.05653	0.05653	0.05653	0.05653	0.05653	0.05653	0.05653
AREA 2=	-0.07463	-0.07463	-0.07463	-0.07463	-0.07463	-0.07463	-0.07463	-0.07463	-0.07463
AREA 3=	0.01678	0.01678	0.01678	0.01678	0.01678	0.01678	0.01678	0.01678	0.01678

WYOMING HIGHWAY DEPARTMENT

BRIDGE DIVISION

TENTH POINT SHEARS INFLUENCE LINES

DATE

SAMPLE PROBLEM NO. 1 CONCRETE T GIRDER BRIDGE 740370PEKR9DES

LOAD POINT	V 8.1	V 8.2	V 8.3	V 8.4	V 8.5	V 8.6	V 8.7	V 8.8	V 8.9
8.0	0.0	0.0	0.0	0.0	0.0	0.0	0.0	0.0	0.0
8.1	0.97218	-0.02782	-0.02782	-0.02782	-0.02782	-0.02782	-0.02782	-0.02782	-0.02782
8.2	0.92903	0.92903	-0.07097	-0.07097	-0.07097	-0.07097	-0.07097	-0.07097	-0.07097
8.3	0.86987	0.86987	0.86987	-0.13013	-0.13013	-0.13013	-0.13013	-0.13013	-0.13013
8.4	0.79407	0.79407	0.79407	0.79407	-0.20593	-0.20593	-0.20593	-0.20593	-0.20593
8.5	0.70119	0.70119	0.70119	0.70119	0.70119	-0.29881	-0.29881	-0.29881	-0.29881
8.6	0.59104	0.59104	0.59104	0.59104	0.59104	0.59104	-0.40896	-0.40896	-0.40896
8.7	0.46394	0.46394	0.46394	0.46394	0.46394	0.46394	-0.53606	-0.53606	-0.53606
8.8	0.32099	0.32099	0.32099	0.32099	0.32099	0.32099	0.32099	-0.67901	-0.67901
8.9	0.16472	0.16472	0.16472	0.16472	0.16472	0.16472	0.16472	0.16472	-0.83528
9.0	0.0	0.0	0.0	0.0	0.0	0.0	0.0	0.0	0.0
9.1	0.00547	0.00547	0.00547	0.00547	0.00547	0.00547	0.00547	0.00547	0.00547
9.2	0.00978	0.00978	0.00978	0.00978	0.00978	0.00978	0.00978	0.00978	0.00978
9.3	0.01288	0.01288	0.01288	0.01288	0.01288	0.01288	0.01288	0.01288	0.01288
9.4	0.01472	0.01472	0.01472	0.01472	0.01472	0.01472	0.01472	0.01472	0.01472
9.5	0.01526	0.01526	0.01526	0.01526	0.01526	0.01526	0.01526	0.01526	0.01526
9.6	0.01449	0.01449	0.01449	0.01449	0.01449	0.01449	0.01449	0.01449	0.01449
9.7	0.01243	0.01243	0.01243	0.01243	0.01243	0.01243	0.01243	0.01243	0.01243
9.8	0.00917	0.00917	0.00917	0.00917	0.00917	0.00917	0.00917	0.00917	0.00917
9.9	0.00491	0.00491	0.00491	0.00491	0.00491	0.00491	0.00491	0.00491	0.00491
AREA 8=	0.53070	0.43070	0.33070	0.23070	0.13070	0.03070	-0.06930	-0.16930	-0.26930
1ST AREA=	-0.00139	-0.00633	-0.01639	-0.03319	-0.05842	-0.09381	-0.14106	-0.20182	-0.27753
AREA 9=	0.00640	0.00640	0.00640	0.00640	0.00640	0.00640	0.00640	0.00640	0.00640
SUM -	-0.07602	-0.08096	-0.09101	-0.10782	-0.13305	-0.16844	-0.28499	-0.44574	-0.621
SUM +	1.14250	0.94744	0.75750	0.57430	0.39954	0.23493	0.15147	0.11223	0.087
SUM T	1.06648	0.86648	0.66648	0.46648	0.26648	0.06648	-0.13352	-0.33352	-0.53

WYOMING HIGHWAY DEPARTMENT
BRIDGE DIVISION
TENTH POINT SHEARS INFLUENCE LINES

SAMPLE PROBLEM NO. 1 CONCRETE T GIRDER BRIDGE 740370PEK89DES

LOAD POINT	V 9.1	V 9.2	V 9.3	V 9.4	V 9.5	V 9.6	V 9.7	V 9.8	V 9.9
1.0	0.0	0.0	0.0	0.0	0.0	0.0	0.0	0.0	0.0
1.1	-0.00782	-0.00782	-0.00782	-0.00782	-0.00782	-0.00782	-0.00782	-0.00782	-0.00782
1.2	-0.01501	-0.01501	-0.01501	-0.01501	-0.01501	-0.01501	-0.01501	-0.01501	-0.01501
1.3	-0.02093	-0.02093	-0.02093	-0.02093	-0.02093	-0.02093	-0.02093	-0.02093	-0.02093
1.4	-0.02495	-0.02495	-0.02495	-0.02495	-0.02495	-0.02495	-0.02495	-0.02495	-0.02495
1.5	-0.02654	-0.02654	-0.02654	-0.02654	-0.02654	-0.02654	-0.02654	-0.02654	-0.02654
1.6	-0.02550	-0.02550	-0.02550	-0.02550	-0.02550	-0.02550	-0.02550	-0.02550	-0.02550
1.7	-0.02196	-0.02196	-0.02196	-0.02196	-0.02196	-0.02196	-0.02196	-0.02196	-0.02196
1.8	-0.01625	-0.01625	-0.01625	-0.01625	-0.01625	-0.01625	-0.01625	-0.01625	-0.01625
1.9	-0.00879	-0.00879	-0.00879	-0.00879	-0.00879	-0.00879	-0.00879	-0.00879	-0.00879
2.0	0.0	0.0	0.0	0.0	0.0	0.0	0.0	0.0	0.0
2.1	0.01413	0.01413	0.01413	0.01413	0.01413	0.01413	0.01413	0.01413	0.01413
2.2	0.03140	0.03140	0.03140	0.03140	0.03140	0.03140	0.03140	0.03140	0.03140
2.3	0.05138	0.05138	0.05138	0.05138	0.05138	0.05138	0.05138	0.05138	0.05138
2.4	0.07192	0.07192	0.07192	0.07192	0.07192	0.07192	0.07192	0.07192	0.07192
2.5	0.08852	0.08852	0.08852	0.08852	0.08852	0.08852	0.08852	0.08852	0.08852
2.6	0.09569	0.09569	0.09569	0.09569	0.09569	0.09569	0.09569	0.09569	0.09569
2.7	0.08967	0.08967	0.08967	0.08967	0.08967	0.08967	0.08967	0.08967	0.08967
2.8	0.07013	0.07013	0.07013	0.07013	0.07013	0.07013	0.07013	0.07013	0.07013
2.9	0.03926	0.03926	0.03926	0.03926	0.03926	0.03926	0.03926	0.03926	0.03926
3.0	0.0	0.0	0.0	0.0	0.0	0.0	0.0	0.0	0.0
3.1	-0.02964	-0.02964	-0.02964	-0.02964	-0.02964	-0.02964	-0.02964	-0.02964	-0.02964
3.2	-0.05475	-0.05475	-0.05475	-0.05475	-0.05475	-0.05475	-0.05475	-0.05475	-0.05475
3.3	-0.07399	-0.07399	-0.07399	-0.07399	-0.07399	-0.07399	-0.07399	-0.07399	-0.07399
3.4	-0.08594	-0.08594	-0.08594	-0.08594	-0.08594	-0.08594	-0.08594	-0.08594	-0.08594
3.5	-0.08944	-0.08944	-0.08944	-0.08944	-0.08944	-0.08944	-0.08944	-0.08944	-0.08944
3.6	-0.08406	-0.08406	-0.08406	-0.08406	-0.08406	-0.08406	-0.08406	-0.08406	-0.08406
3.7	-0.07053	-0.07053	-0.07053	-0.07053	-0.07053	-0.07053	-0.07053	-0.07053	-0.07053
3.8	-0.05059	-0.05059	-0.05059	-0.05059	-0.05059	-0.05059	-0.05059	-0.05059	-0.05059
3.9	-0.02637	-0.02637	-0.02637	-0.02637	-0.02637	-0.02637	-0.02637	-0.02637	-0.02637
AREA 1=	-0.01678	-0.01678	-0.01678	-0.01678	-0.01678	-0.01678	-0.01678	-0.01678	-0.01678
AREA 2=	0.07463	0.07463	0.07463	0.07463	0.07463	0.07463	0.07463	0.07463	0.07463
AREA 3=	-0.05653	-0.05653	-0.05653	-0.05653	-0.05653	-0.05653	-0.05653	-0.05653	-0.05653

WYOMING HIGHWAY DEPARTMENT
BRIDGE DIVISION
TENTH POINT SHEARS INFLUENCE LINES

DATE
PAGE NO. 41

SAMPLE PROBLEM NO. 1 CONCRETE T GIRDER BRIDGE 740370PEKRODES

LOAD POINT	V 9.1	V 9.2	V 9.3	V 9.4	V 9.5	V 9.6	V 9.7	V 9.8	V 9.9
8.0	0.0	0.0	0.0	0.0	0.0	0.0	0.0	0.0	0.0
8.1	0.00547	0.00547	0.00547	0.00547	0.00547	0.00547	0.00547	0.00547	0.00547
8.2	0.00978	0.00978	0.00978	0.00978	0.00978	0.00978	0.00978	0.00978	0.00978
8.3	0.01288	0.01288	0.01288	0.01288	0.01288	0.01288	0.01288	0.01288	0.01288
8.4	0.01472	0.01472	0.01472	0.01472	0.01472	0.01472	0.01472	0.01472	0.01472
8.5	0.01526	0.01526	0.01526	0.01526	0.01526	0.01526	0.01526	0.01526	0.01526
8.6	0.01449	0.01449	0.01449	0.01449	0.01449	0.01449	0.01449	0.01449	0.01449
8.7	0.01243	0.01243	0.01243	0.01243	0.01243	0.01243	0.01243	0.01243	0.01243
8.8	0.00917	0.00917	0.00917	0.00917	0.00917	0.00917	0.00917	0.00917	0.00917
8.9	0.00491	0.00491	0.00491	0.00491	0.00491	0.00491	0.00491	0.00491	0.00491
9.0	0.0	0.0	0.0	0.0	0.0	0.0	0.0	0.0	0.0
9.1	0.97218	-0.02782	-0.02782	-0.02782	-0.02782	-0.02782	-0.02782	-0.02782	-0.02782
9.2	0.92903	0.92903	-0.07097	-0.07097	-0.07097	-0.07097	-0.07097	-0.07097	-0.07097
9.3	0.86987	0.86987	0.86987	-0.13013	-0.13013	-0.13013	-0.13013	-0.13013	-0.13013
9.4	0.79407	0.79407	0.79407	0.79407	-0.20593	-0.20593	-0.20593	-0.20593	-0.20593
9.5	0.70119	0.70119	0.70119	0.70119	0.70119	-0.29881	-0.29881	-0.29881	-0.29881
9.6	0.59104	0.59104	0.59104	0.59104	0.59104	0.59104	-0.40896	-0.40896	-0.40896
9.7	0.46394	0.46394	0.46394	0.46394	0.46394	0.46394	-0.53606	-0.53606	-0.53606
9.8	0.32099	0.32099	0.32099	0.32099	0.32099	0.32099	0.32099	-0.67901	-0.67901
9.9	0.16472	0.16472	0.16472	0.16472	0.16472	0.16472	0.16472	0.16472	-0.83528
AREA 8=	0.00640	0.00640	0.00640	0.00640	0.00640	0.00640	0.00640	0.00640	0.00640
AREA 9=	0.53070	0.43070	0.33070	0.23070	0.13070	0.03070	-0.06930	-0.16930	-0.26930
1ST AREA=	-0.00139	-0.00633	-0.01639	-0.03319	-0.05842	-0.09381	-0.14106	-0.20182	-0.27753
SUM -	-0.07470	-0.07964	-0.08969	-0.10650	-0.13173	-0.16712	-0.28367	-0.44442	-0.62(
SUM +	1.14382	0.94876	0.75882	0.57562	0.40086	0.23625	0.15279	0.11355	0.089
SUM T	1.06912	0.86913	0.66913	0.46913	0.26913	0.06913	-0.13087	-0.33087	-0.53(

WYOMING HIGHWAY DEPARTMENT
BRIDGE DESIGN DIVISION

DATE
PAGE NO. 42

SAMPLE PROBLEM NO. 1 CONCRETE T GIRDER BRIDGE 740370PEKR9DES

INPUT AS RECEIVED BY COMPUTER

WORK CODE	DATA CODE	ENTRY 1	ENTRY 2	ENTRY 3	ENTRY 4	ENTRY 5	ENTRY 6
DC	2	1111.00000	1.45830	100.00000	36.00000	24.00000	0.0
	201	0.0	0.15000	3200.00000	0.0	0.0	0.0
	202	0.15750	1.00000	3.00000	0.0	0.0	0.0
	301	13.00000	4.00000	14.00000	16.00000	14.00000	16.0000
	302	30.00000	0.0	0.0	0.0	0.0	0.0
	301	23.00000	12.00000	4.00000	12.00000	0.0	0.0
	309	0.32000	9.00000	13.00000	0.0	0.0	0.0
DC	5	11.00000	1.00000	0.0	0.0	0.0	0.0

NOW CALLING 1BRSYS21

NOW CALLING 1BRSYS31

NOW CALLING 1BRSYS24

NOW CALLING 1BRSYS32

NOW CALLING 1BRSYS22

SAMPLE PROBLEM NO. 1 CONCRETE T GIRDER BRIDGE 740370PEKR9DES

** GIRDER MOMENTS, SHEARS, AND REACTIONS **

SPAN LENGTH OF NO. 1= 36.25 FT
GIRDER WEIGHT= 1.14 KIPS/FT SUPERIMPOSED DEAD LOAD= 0.16 KIPS/FT E(MODULUS)= 3200 KIPS/SQ I
LIVE LOAD WHEEL FRACTION= 1.46

	DEAD LOAD GIRDER			SUPERIMPOSED DEAD LOAD			POINT LOADING			
POINT	REACTION	SHEAR	MOMENT	REACTION	SHEAR	MOMENT	LOADING	REACTION	SHEAR	MOMENT
1.0R	13.284	13.284	0.0	1.821	1.821	0.0		0.0	0.0	0.0
1.1		9.149	0.0		1.250	0.0			0.0	0.0
1.2		5.014	0.0		0.679	0.0			0.0	0.0
1.3		0.879	0.0		0.108	0.0			0.0	0.0
1.4		-3.276	72.70		-0.463	9.85			0.0	0.0
1.5		-7.520	0.0		-1.034	0.0			0.0	0.0
1.6		-11.924	0.0		-1.604	0.0			0.0	0.0
1.7		-16.568	0.0		-2.175	0.0			0.0	0.0
1.8		-21.493	0.0		-2.746	0.0			0.0	0.0
1.9		-26.799	0.0		-3.317	0.0			0.0	0.0
2.0L	63.396	-30.934	-289.70	7.747	-3.888	-37.47		0.0	0.0	0.0

	TRUCK LOAD 1				TRUCK LOAD 2				TRUCK LOAD 3			
POINT	REACTION	SHEAR	+MOMENT	-MOMENT	REACTION	SHEAR	+MOMENT	-MOMENT	REACTION	SHEAR	+MOMENT	-MOMENT
1.0R	45.166	45.166	0.0	0.0	41.761	41.761	0.0	0.0	33.799	33.799	0.0	0.0
1.1		0.0	0.0	0.0		0.0	0.0	0.0		0.0	0.0	0.0
1.2		0.0	0.0	0.0		0.0	0.0	0.0		0.0	0.0	0.0
1.3		0.0	0.0	0.0		0.0	0.0	0.0		0.0	0.0	0.0
1.4		-20.191	243.2	-97.24		-22.173	252.7	-80.15		-15.992	178.5	-61.86
1.5		0.0	0.0	0.0		0.0	0.0	0.0		0.0	0.0	0.0
1.6		0.0	0.0	0.0		0.0	0.0	0.0		0.0	0.0	0.0
1.7		0.0	0.0	0.0		0.0	0.0	0.0		0.0	0.0	0.0
1.8		0.0	0.0	0.0		0.0	0.0	0.0		0.0	0.0	0.0
1.9		0.0	0.0	0.0		0.0	0.0	0.0		0.0	0.0	0.0
2.0L	64.816	-56.249	50.85	-325.72	45.336	-44.350	55.54	-268.00	56.622	-40.102	38.82	-341.77

NOTE, -MOMENT IS A MOMENT THAT CAUSES TENSION ON THE OUTSIDE OF THE STRUCTURE

SAMPLE PROBLEM NO. 1 CONCRETE T GIRDER BRIDGE 740370PEKR9DES

** GIRDER MOMENTS, SHEARS, AND REACTIONS **

SPAN LENGTH OF NO. 2= 49.00 FT
GIRDER WEIGHT= 1.14 KIPS/FT SUPERIMPOSED DEAD LOAD= 0.16 KIPS/FT E(MODULUS)= 3200 KIPS/SQ I
LIVE LOAD WHEEL FRACTION= 1.46

	DEAD LOAD GIRDER			SUPERIMPOSED DEAD LOAD				POINT LOADING		
POINT	REACTION	SHEAR	MOMENT	REACTION	SHEAR	MOMENT	LOADING	REACTION	SHEAR	MOMENT
2.0R	63.396	30.564	-291.53	7.747	3.859	-37.64		0.0	0.0	0.0
2.1		23.578	0.0		3.087	0.0			0.0	0.0
2.2		17.203	0.0		2.315	0.0			0.0	0.0
2.3		11.265	0.0		1.543	0.0			0.0	0.0
2.4		5.589	0.0		0.772	0.0			0.0	0.0
2.5		-0.000	72.19		-0.000	9.63			0.0	0.0
2.6		-5.677	0.0		-0.772	0.0			0.0	0.0
2.7		-11.615	0.0		-1.544	0.0			0.0	0.0
2.8		-17.989	0.0		-2.315	0.0			0.0	0.0
2.9		-24.975	0.0		-3.087	0.0			0.0	0.0
3.0L	63.396	-30.564	-291.53	7.747	-3.859	-37.64		0.0	0.0	0.0

	TRUCK LOAD 1				TRUCK LOAD 2				TRUCK LOAD 3			
POINT	REACTION	SHEAR	+MOMENT	-MOMENT	REACTION	SHEAR	+MOMENT	-MOMENT	REACTION	SHEAR	+MOMENT	-MOMENT
2.0R	64.185	56.188	90.11	-363.03	44.895	43.884	82.24	-299.24	56.071	40.765	57.48	-353.56
2.1		0.0	0.0	0.0		0.0	0.0	0.0		0.0	0.0	0.0
2.2		0.0	0.0	0.0		0.0	0.0	0.0		0.0	0.0	0.0
2.3		0.0	0.0	0.0		0.0	0.0	0.0		0.0	0.0	0.0
2.4		0.0	0.0	0.0		0.0	0.0	0.0		0.0	0.0	0.0
2.5		-19.494	235.1	-50.66		-20.059	231.3	-46.24		-13.843	166.8	-64.64
2.6		0.0	0.0	0.0		0.0	0.0	0.0		0.0	0.0	0.0
2.7		0.0	0.0	0.0		0.0	0.0	0.0		0.0	0.0	0.0
2.8		0.0	0.0	0.0		0.0	0.0	0.0		0.0	0.0	0.0
2.9		0.0	0.0	0.0		0.0	0.0	0.0		0.0	0.0	0.0
3.0L	0.0	0.0	0.0	0.0	0.0	0.0	0.0	0.0	0.0	0.0	0.0	0.0

NOTE, -MOMENT IS A MOMENT THAT CAUSES TENSION ON THE OUTSIDE OF THE STRUCTURE

SAMPLE PROBLEM NO. 1 CONCRETE T GIRDER BRIDGE 740370PEKRODES

** GIRDER MOMENTS, SHEARS, AND REACTIONS **

SPAN LENGTH OF NO. 3= 36.25 FT

GIRDER WEIGHT= 1.14 KIPS/FT SUPERIMPOSED DEAD LOAD= 0.16 KIPS/FT E(MODULUS)= 3200 KIPS/SQ IN

LIVE LOAD WHEEL FRACTION= 1.46

	DEAD LOAD GIRDER			SUPERIMPOSED DEAD LOAD			POINT LOADING			
POINT	REACTION	SHEAR	MOMENT	REACTION	SHEAR	MOMENT	LOADING	REACTION	SHEAR	MOMENT
3.0P	63.396	30.934	-289.70	7.747	3.883	-37.47		0.0	0.0	0.0
3.1		25.627	0.0		3.317	0.0			0.0	0.0
3.2		20.692	0.0		2.746	0.0			0.0	0.0
3.3		16.058	0.0		2.175	0.0			0.0	0.0
3.4		11.654	0.0		1.604	0.0			0.0	0.0
3.5		7.410	0.0		1.034	0.0			0.0	0.0
3.6		3.255	0.0		0.463	0.0			0.0	0.0
3.7		-0.879	0.0		-0.108	0.0			0.0	0.0
3.8		-5.014	0.0		-0.679	0.0			0.0	0.0
3.9		-9.149	0.0		-1.250	0.0			0.0	0.0
4.0L	13.284	-13.284	0.00	1.821	-1.821	0.00		0.0	0.0	0.0

	TRUCK LOAD 1				TRUCK LOAD 2				TRUCK LOAD 3			
POINT	REACTION	SHEAR	+MOMENT	-MOMENT	REACTION	SHEAR	+MOMENT	-MOMENT	REACTION	SHEAR	+MOMENT	-MOMENT
3.0P	0.0	0.0	0.0	0.0	0.0	0.0	0.0	0.0	0.0	0.0	0.0	0.0
3.1		0.0	0.0	0.0		0.0	0.0	0.0		0.0	0.0	0.0
3.2		0.0	0.0	0.0		0.0	0.0	0.0		0.0	0.0	0.0
3.3		0.0	0.0	0.0		0.0	0.0	0.0		0.0	0.0	0.0
3.4		0.0	0.0	0.0		0.0	0.0	0.0		0.0	0.0	0.0
3.5		0.0	0.0	0.0		0.0	0.0	0.0		0.0	0.0	0.0
3.6		0.0	0.0	0.0		0.0	0.0	0.0		0.0	0.0	0.0
3.7		0.0	0.0	0.0		0.0	0.0	0.0		0.0	0.0	0.0
3.8		0.0	0.0	0.0		0.0	0.0	0.0		0.0	0.0	0.0
3.9		0.0	0.0	0.0		0.0	0.0	0.0		0.0	0.0	0.0
4.0L	0.0	0.0	0.0	0.0	0.0	0.0	0.0	0.0	0.0	0.0	0.0	0.0

NOTE, -MOMENT IS A MOMENT THAT CAUSES TENSION ON THE OUTSIDE OF THE STRUCTURE

SAMPLE PROBLEM NO. 1 CONCRETE T GIRDER BRIDGE 740370PEKRODES

** GIRDER MOMENTS, SHEARS, AND REACTIONS **

SPAN LENGTH OF NO. 8= 23.40 FT
GIRDER WEIGHT= 0.0 KIPS/FT SUPERIMPOSED DEAD LOAD= 0.0 KIPS/FT E(MODULUS)= 3200 KIPS/SQ IN
LIVE LOAD WHEEL FRACTION= 1.46

	DEAD LOAD GIRDER			SUPERIMPOSED DEAD LOAD				POINT LOADING		
POINT	REACTION	SHEAR	MOMENT	REACTION	SHEAR	MOMENT	LOADING	REACTION	SHEAR	MOMENT
8.0R	0.078	-0.078	1.83	0.008	-0.008	0.18		0.0	0.0	0.0
8.1		-0.078	0.0		-0.008	0.0			0.0	0.0
8.2		-0.078	0.0		-0.008	0.0			0.0	0.0
8.3		-0.078	0.0		-0.008	0.0			0.0	0.0
8.4		-0.078	0.0		-0.008	0.0			0.0	0.0
8.5		-0.078	0.0		-0.008	0.0			0.0	0.0
8.6		-0.078	0.0		-0.008	0.0			0.0	0.0
8.7		-0.078	0.0		-0.008	0.0			0.0	0.0
8.8		-0.078	0.0		-0.008	0.0			0.0	0.0
8.9		-0.078	0.0		-0.008	0.0			0.0	0.0
9.0L	0.078	-0.078	0.0	0.008	-0.008	0.0		0.0	0.0	0.0

	TRUCK LOAD 1				TRUCK LOAD 2				TRUCK LOAD 3			
POINT	REACTION	SHEAR	+MOMENT	-MOMENT	REACTION	SHEAR	+MOMENT	-MOMENT	REACTION	SHEAR	+MOMENT	-MOMENT
8.0R	-5.146	-5.146	120.42	-101.58	-4.242	-4.242	99.26	-92.71	-3.999	-3.999	76.61	-84.03
8.1		0.251	0.3	0.25		0.251	0.3	0.25		0.251	0.3	0.25
8.2		0.251	0.3	0.25		0.251	0.3	0.25		0.251	0.3	0.25
8.3		0.251	0.3	0.25		0.251	0.3	0.25		0.251	0.3	0.25
8.4		0.251	0.3	0.25		0.251	0.3	0.25		0.251	0.3	0.25
8.5		0.251	0.3	0.25		0.251	0.3	0.25		0.251	0.3	0.25
8.6		0.251	0.3	0.25		0.251	0.3	0.25		0.251	0.3	0.25
8.7		0.251	0.3	0.25		0.251	0.3	0.25		0.251	0.3	0.25
8.8		0.251	0.3	0.25		0.251	0.3	0.25		0.251	0.3	0.25
8.9		0.251	0.3	0.25		0.251	0.3	0.25		0.251	0.3	0.25
9.0L	5.146	-5.146	0.0	0.0	4.242	-4.242	0.0	0.0	3.999	-3.999	0.0	0.0

NOTE, -MOMENT IS A MOMENT THAT CAUSES TENSION ON THE OUTSIDE OF THE STRUCTURE

SAMPLE PROBLEM NO. 1 CONCRETE T GIRDER BRIDGE 740370PEKRODES

** GIRDER MOMENTS, SHEARS, AND REACTIONS **

SPAN LENGTH OF NO. 9= 23.40 FT
GIRDER WEIGHT= 0.0 KIPS/FT SUPERIMPOSED DEAD LOAD= 0.0 KIPS/FT E(MODULUS)= 3200 KIPS/SQ IN
LIVE LOAD WHEEL FRACTION= 1.46

	DEAD LOAD GIRDER			SUPERIMPOSED DEAD LOAD				POINT LOADING		
POINT	REACTION	SHEAR	MOMENT	REACTION	SHEAR	MOMENT	LOADING	REACTION	SHEAR	MOMENT
9.0R	-0.078	0.078	-1.83	-0.008	0.008	-0.18		0.0	0.0	0.0
9.1		0.078	0.0		0.008	0.0			0.0	0.0
9.2		0.078	0.0		0.008	0.0			0.0	0.0
9.3		0.078	0.0		0.008	0.0			0.0	0.0
9.4		0.078	0.0		0.008	0.0			0.0	0.0
9.5		0.078	0.0		0.008	0.0			0.0	0.0
9.6		0.078	0.0		0.008	0.0			0.0	0.0
9.7		0.078	0.0		0.008	0.0			0.0	0.0
9.8		0.078	0.0		0.008	0.0			0.0	0.0
9.9		0.078	0.0		0.008	0.0			0.0	0.0
10.0L	-0.078	0.078	0.0	-0.008	0.008	0.0		0.0	0.0	0.0

	TRUCK LOAD 1				TRUCK LOAD 2				TRUCK LOAD 3			
POINT	REACTION	SHEAR	+MOMENT	-MOMENT	REACTION	SHEAR	+MOMENT	-MOMENT	REACTION	SHEAR	+MOMENT	-MOMENT
9.0R	0.251	0.251	0.25	0.25	0.251	0.251	0.25	0.25	0.251	0.251	0.25	0.25
9.1		0.251	0.3	0.25		0.251	0.3	0.25		0.251	0.3	0.25
9.2		0.251	0.3	0.25		0.251	0.3	0.25		0.251	0.3	0.25
9.3		0.251	0.3	0.25		0.251	0.3	0.25		0.251	0.3	0.25
9.4		0.251	0.3	0.25		0.251	0.3	0.25		0.251	0.3	0.25
9.5		0.251	0.3	0.25		0.251	0.3	0.25		0.251	0.3	0.25
9.6		0.251	0.3	0.25		0.251	0.3	0.25		0.251	0.3	0.25
9.7		0.251	0.3	0.25		0.251	0.3	0.25		0.251	0.3	0.25
9.8		0.251	0.3	0.25		0.251	0.3	0.25		0.251	0.3	0.25
9.9		0.251	0.3	0.25		0.251	0.3	0.25		0.251	0.3	0.25
10.0L	0.251	0.251	0.25	0.25	0.251	0.251	0.25	0.25	0.251	0.251	0.25	0.25

NOTE, -MOMENT IS A MOMENT THAT CAUSES TENSION ON THE OUTSIDE OF THE STRUCTURE

SAMPLE PROBLEM NO. 1 CONCRETE T GIRDER BRIDGE 740370PEKR9DES

** MAXIMUM MOMENTS, SHEARS, REACTIONS, & DEFLECTIONS **

SPAN LENGTH OF NO. 1= 36.25 FT

GIRDER WEIGHT= 1.14 KIPS/FT SUPERIMPOSED DEAD LOAD= 0.16 KIPS/FT E(MODULUS)= 3200 KIPS/SQ IN

DESIGN VALUES

	1.0R	1.1	1.2	1.3	1.4	1.5	1.6	1.7	1.8	1.9	2.0L
REACTION	60.3										135.3
SHEAR	60.3	10.4	5.7	1.0	-25.9	-8.6	-13.5	-18.7	-24.2	-30.1	-91.1
+MOMENTS	0.0	0.0	0.0	0.0	335.3	0.0	0.0	0.0	0.0	0.0	-266.3
-MOMENTS	0.0	0.0	0.0	0.0	-14.7	0.0	0.0	0.0	0.0	0.0	-668.9

DEFLECTIONS (MAX. ALLOWABLE LIVE LOAD DEF.=L/800= 0.0453 FT.)

	1.0R	1.1	1.2	1.3	1.4	1.5	1.6	1.7	1.8	1.9	2.0L
DEAD DEC FT	0.0	0.000	0.001	0.001	0.002	0.002	0.001	0.001	0.001	0.000	0.0
LOAD FRA IN	0 0/16	0 0/16	0 0/16	0 0/16	0 0/16	0 0/16	0 0/16	0 0/16	0 0/16	0 0/16	0 0/16
TRUCK FT	0.0	0.001	0.003	0.004	0.005	0.005	0.004	0.003	0.002	0.001	0.0
LANELOAD	0.0	0.001	0.002	0.004	0.004	0.004	0.003	0.003	0.002	0.001	0.0
MILITARY	0.0	0.001	0.003	0.004	0.006	0.005	0.004	0.003	0.002	0.001	0.0

SPAN LENGTH OF NO. 2= 49.00 FT

GIRDER WEIGHT= 1.14 KIPS/FT SUPERIMPOSED DEAD LOAD= 0.16 KIPS/FT E(MODULUS)= 3200 KIPS/SQ IN

DESIGN VALUES

	2.0R	2.1	2.2	2.3	2.4	2.5	2.6	2.7	2.8	2.9	3.0L
REACTION	135.3										71.1
SHEAR	90.6	26.7	19.5	12.8	6.4	-20.1	-6.4	-13.2	-20.3	-28.1	-34.4
+MOMENTS	-239.1	0.0	0.0	0.0	0.0	316.9	0.0	0.0	0.0	0.0	-329.2
-MOMENTS	-692.2	0.0	0.0	0.0	0.0	17.2	0.0	0.0	0.0	0.0	-329.2

DEFLECTIONS (MAX. ALLOWABLE LIVE LOAD DEF.=L/800= 0.0612 FT.)

	2.0R	2.1	2.2	2.3	2.4	2.5	2.6	2.7	2.8	2.9	3.0L
DEAD DEC FT	0.0	0.001	0.001	0.002	0.003	0.003	0.003	0.002	0.001	0.001	0.0
LOAD FRA IN	0 0/16	0 0/16	0 0/16	0 0/16	0 1/16	0 1/16	0 1/16	0 0/16	0 0/16	0 0/16	0 0/16
TRUCK FT	0.0	0.002	0.004	0.006	0.008	0.010	0.008	0.006	0.004	0.002	0.0
LANELOAD	0.0	0.001	0.003	0.004	0.006	0.007	0.006	0.004	0.003	0.001	0.0
MILITARY	0.0	0.002	0.004	0.006	0.008	0.010	0.008	0.006	0.004	0.002	0.0

NOTE, -MOMENT IS A MOMENT THAT CAUSES TENSION ON THE OUTSIDE OF THE STRUCTURE

SAMPLE PROBLEM NO. 1 CONCRETE T GIRDER BRIDGE 740370PEK88DES

** MAXIMUM MOMENTS, SHEARS, REACTIONS, & DEFLECTIONS **

SPAN LENGTH OF NO. 3= 36.25 FT

GIRDER WEIGHT= 1.14 KIPS/FT SUPERIMPOSED DEAD LOAD= 0.16 KIPS/FT E(MODULUS)= 3200 KIPS/SQ IN

DESIGN VALUES

	3.0R	3.1	3.2	3.3	3.4	3.5	3.6	3.7	3.8	3.9	4.0L
REACTION	71.1										15.1
SHEAR	34.8	28.9	23.4	18.2	13.3	8.4	3.7	-1.0	-5.7	-10.4	-15.1
+MOMENTS	-327.2	0.0	0.0	0.0	0.0	0.0	0.0	0.0	0.0	0.0	0.0
-MOMENTS	-327.2	0.0	0.0	0.0	0.0	0.0	0.0	0.0	0.0	0.0	0.0

DEFLECTIONS (MAX. ALLOWABLE LIVE LOAD DEF.=L/800= 0.0453 FT.)

	3.0R	3.1	3.2	3.3	3.4	3.5	3.6	3.7	3.8	3.9	4.0L
DEAD DEC FT	0.0	-0.000	-0.000	-0.000	-0.000	-0.000	-0.000	-0.000	-0.000	-0.000	0.0
LOAD ERA IN	0 0/16	- 0 0/16	- 0 0/16	- 0 0/16	- 0 0/16	- 0 0/16	- 0 0/16	- 0 0/16	- 0 0/16	- 0 0/16	0 0/16
TRUCK FT	0.0	-0.000	-0.000	-0.000	-0.000	-0.000	-0.000	-0.000	-0.000	-0.000	0.0
LANELOAD	0.0	0.000	0.000	0.001	0.001	0.001	0.001	0.001	0.000	0.000	0.0
MILITARY	0.0	0.005	0.039	0.074	0.108	0.135	0.118	0.093	0.068	0.043	0.0

SPAN LENGTH OF NO. 8= 23.40 FT

GIRDER WEIGHT= 0.0 KIPS/FT SUPERIMPOSED DEAD LOAD= 0.0 KIPS/FT E(MODULUS)= 3200 KIPS/SQ IN

DESIGN VALUES

	8.0R	8.1	8.2	8.3	8.4	8.5	8.6	8.7	8.8	8.9	9.0L
REACTION	-3.9										0.2
SHEAR	-5.2	0.2	0.2	0.2	0.2	0.2	0.2	0.2	0.2	0.2	-5.2
+MOMENTS	122.4	0.3	0.3	0.3	0.3	0.3	0.3	0.3	0.3	0.3	0.0
-MOMENTS	-99.6	0.3	0.3	0.3	0.3	0.3	0.3	0.3	0.3	0.3	0.0

DEFLECTIONS (MAX. ALLOWABLE LIVE LOAD DEF.=L/800= 0.0292 FT.)

	8.0R	8.1	8.2	8.3	8.4	8.5	8.6	8.7	8.8	8.9	9.0L
DEAD DEC FT	0.0	0.000	0.000	0.000	0.000	0.000	0.000	0.000	0.000	0.000	0.0
LOAD ERA IN	0 0/16	0 0/16	0 0/16	0 0/16	0 0/16	0 0/16	0 0/16	0 0/16	0 0/16	0 0/16	0 0/16
TRUCK FT	0.0	0.0	0.0	0.0	0.0	0.0	0.0	0.0	0.0	0.0	0.0
LANELOAD	0.0	0.0	0.0	0.0	0.0	0.0	0.0	0.0	0.0	0.0	0.0
MILITARY	0.0	0.0	0.0	0.0	0.0	0.0	0.0	0.0	0.0	0.0	0.0

NOTE, -MOMENT IS A MOMENT THAT CAUSES TENSION ON THE OUTSIDE OF THE STRUCTURE

SAMPLE PROBLEM NO. 1 CONCRETE T GIRDER BRIDGE 740370PEKRDES

** MAXIMUM MOMENTS, SHEARS, REACTIONS, & DEFLECTIONS **

SPAN LENGTH OF NO. 0= 23.40 FT

GIRDER WEIGHT= 0.0 KIPS/FT SUPERIMPOSED DEAD LOAD= 0.0 KIPS/FT E(MODULUS)= 3200 KIPS/SQ IN

DESIGN VALUES

	0.00	0.1	0.2	0.3	0.4	0.5	0.6	0.7	0.8	0.9	10.0L
REACTION	0.2										0.2
SHEAR	0.3	0.3	0.3	0.3	0.3	0.3	0.3	0.3	0.3	0.3	0.3
+MOMENTS	-1.8	0.3	0.3	0.3	0.3	0.3	0.3	0.3	0.3	0.3	0.3
-MOMENTS	-1.8	0.3	0.3	0.3	0.3	0.3	0.3	0.3	0.3	0.3	0.3

DEFLECTIONS (MAX. ALLOWABLE LIVE LOAD DEF.=L/800= 0.0292 FT.)

	0.00	0.1	0.2	0.3	0.4	0.5	0.6	0.7	0.8	0.9	10.0L
DEAD DEC FT	0.0	-0.000	-0.000	-0.000	-0.000	-0.000	-0.000	-0.000	-0.000	-0.000	0.0
LOAD ERA IN	0 0/16	- 0 0/16	- 0 0/16	- 0 0/16	- 0 0/16	- 0 0/16	- 0 0/16	- 0 0/16	- 0 0/16	- 0 0/16	0 0/16
TRUCK FT	0.0	0.0	0.0	0.0	0.0	0.0	0.0	0.0	0.0	0.0	0.0
LANELOAD	0.0	0.0	0.0	0.0	0.0	0.0	0.0	0.0	0.0	0.0	0.0
MILITARY	0.0	0.0	0.0	0.0	0.0	0.0	0.0	0.0	0.0	0.0	0.0

NOW CALLING 1BRSYS00

WYOMING HIGHWAY DEPARTMENT
BRIDGE DESIGN DIVISION

DATE
PAGE NO 51

SAMPLE PROBLEM NO. 1 CONCRETE T GIRDER BRIDGE

740370PEKRODES

WORK CODE	DATA CODE	ENTRY 1	ENTRY 2	ENTRY 3	ENTRY 4	ENTRY 5	ENTRY 6	
DC	5	11.00000	1.00000	0.0	0.0	0.0	0.0	*****
	501	0.50000	0.50000	0.40000	0.0	0.0	0.0	0
	502	0.75000	0.75000	0.55000	0.0	0.0	0.0	0
	510	1.00000	3.00000	2.00000	3.00000	0.0	0.0	0
	550	100.00000	40000.00000	40000.00000	3000.00000	100.00000	10.00000	1
	552	6.24000	3.00000	6.24000	7.00000	0.0	0.0	1
	553	0.0	0.0	2.48000	2.00000	0.40000	12.00000	0
	550	104.00000	40000.00000	40000.00000	3000.00000	100.00000	10.00000	1
	552	6.24000	3.00000	6.24000	7.00000	0.0	0.0	1
	553	0.0	0.0	2.48000	2.00000	0.40000	12.00000	0
	550	110.00000	40000.00000	40000.00000	3000.00000	100.00000	10.00000	1
	552	3.12000	3.00000	0.0	0.0	0.0	0.0	1
	553	0.0	0.0	13.43000	2.00000	0.40000	10.00000	0
	550	200.00000	40000.00000	40000.00000	3000.00000	100.00000	10.00000	1
	552	3.12000	3.00000	0.0	0.0	0.0	0.0	1
	553	0.0	0.0	13.43000	2.00000	0.40000	10.00000	0
	550	205.00000	40000.00000	40000.00000	3000.00000	100.00000	10.00000	1
	552	6.24000	3.00000	6.24000	7.00000	0.0	0.0	1
	553	0.0	0.0	2.48000	2.00000	0.40000	12.00000	0
	550	800.00000	40000.00000	40000.00000	3000.00000	100.00000	10.00000	1
	552	2.37000	3.00000	0.0	0.0	0.0	0.0	1
	553	0.0	0.0	2.37000	3.00000	0.40000	12.00000	1
	554	2.37000	3.00000	2.37000	3.00000	1.00000	0.0	0
	550	810.00000	40000.00000	40000.00000	3000.00000	100.00000	10.00000	1
	552	2.37000	3.00000	0.0	0.0	0.0	0.0	1
	553	0.0	0.0	2.37000	3.00000	0.40000	12.00000	1
	554	2.37000	3.00000	2.37000	3.00000	1.00000	0.0	0

SAMPLE PROBLEM NO. 1 CONCRETE T GIRDER BRIDGE 740370PEKR9DES

REINFORCING CONCRETE SECTION REVIEW

SPAN 1 @ 0 TENTH POINT

INPUT SECTION DIMENSIONS

DEPTH SECTION	27.00	TOP FLANGE THICKNESS	7.00	BOTTOM FLANGE THICKNESS	0.0
THICKNESS WEB	18.00	TOP FLANGE WIDTH	105.00	BOTTOM FLANGE WIDTH	0.0

INPUT REINFORCING DETAILS

AREA BOTTOM STEEL	12.48	AREA TOP STEEL	2.48	AREA STIRRUPS	0.40
DISTANCE FROM BOTTOM	5.00	DISTANCE FROM TOP	2.00	SPACING STIRRUPS	12.00

MATERIALS CONSTANTS

YIELD STRENGTH REINFORCING 40000. ULTIMATE STRENGTH CONCRETE 3000.
% CONCRETE IN SHEAR 100.%

APPLIED ACTIONS

	DEAD LOAD	TRUCK #1 POSITIVE	TRUCK #1 NEGATIVE	TRUCK #2 POSITIVE	TRUCK #2 NEGATIVE	TRUCK #3 POSITIVE	TRUCK #3 NEGATIVE
MOMENT Z-Z	0.0	0.0	0.0	0.0	0.0	0.0	0.0
SHEAR Y-Z	15.10	45.17		41.76		33.80	

ALLOWABLE STRESSES

TENSION STEEL = 0.0 COMPRESSION CONCRETE = 1200.0 STIRRUP STEEL = 20000.0
COMPRESSION STEEL = 20000.0 SHEAR IN CONCRETE = 0.0

ACTUAL STRESSES

TRUCK #1

REINFORCING CONCRETE SECTION REVIEW

SPAN 1 @ 0 TENTH POINT -CONTINUED-

TRUCK #2

TRUCK #3

SAMPLE PROBLEM NO. 1 CONCRETE T GIRDER BRIDGE 740370PEKR9DES

REINFORCING CONCRETE SECTION REVIEW

SPAN 1 @ 4 TENTH POINT

INPUT SECTION DIMENSIONS

DEPTH SECTION	27.30	TOP FLANGE THICKNESS	7.00	BOTTOM FLANGE THICKNESS	0.0
THICKNESS WEB	18.00	TOP FLANGE WIDTH	105.00	BOTTOM FLANGE WIDTH	0.0

INPUT REINFORCING DETAILS

AREA BOTTOM STEEL	12.48	AREA TOP STEEL	2.48	AREA STIRRUPS	0.40
DISTANCE FROM BOTTOM	5.00	DISTANCE FROM TOP	2.00	SPACING STIRRUPS	12.00

MATERIALS CONSTANTS

YIELD STRENGTH REINFORCING 40000. ULTIMATE STRENGTH CONCRETE 3000.
% CONCRETE IN SHEAR 100.%

APPLIED ACTIONS

	DEAD LOAD	TRUCK #1 POSITIVE	TRUCK #1 NEGATIVE	TRUCK #2 POSITIVE	TRUCK #2 NEGATIVE	TRUCK #3 POSITIVE	TRUCK #3 NEGATIVE
MOMENT Z-Z	82.55	243.19	-97.24	252.72	-80.15	178.53	-61.86
SHEAR Y-Z	-3.74	-20.19		-22.17		-15.99	

ALLOWABLE STRESSES

TENSION STEEL =	20000.0	COMPRESSION CONCRETE =	1200.0	STIRRUP STEEL =	20000.0
COMPRESSION STEEL =	20000.0	SHEAR IN CONCRETE =	90.0		

ACTUAL STRESSES

TRUCK #1

POSITIVE MOMENT

TENSION STEEL =	15417.0	COMPRESSION CONCRETE =	560.4	STIRRUP STEEL =	0.0
COMPRESSION STEEL =	7436.7	SHEAR IN CONCRETE =	65.4		

NEGATIVE MOMENT

TENSION STEEL =	3199.8	COMPRESSION CONCRETE =	94.7	STIRRUP STEEL =	0.0
COMPRESSION STEEL =	254.3	SHEAR IN CONCRETE =	59.9		

SAMPLE PROBLEM NO. 1 CONCRETE T GIRDER BRIDGE 740370PEKR9DES

REINFORCING CONCRETE SECTION REVIEW

SPAN 1 @ 4 TENTH POINT -CONTINUED-

TRUCK #2

POSITIVE MOMENT

TENSION STEEL =	15868.1	COMPRESSION CONCRETE =	576.8	STIRRUP STEEL =	0.0
COMPRESSION STEEL =	7654.3	SHEAR IN CONCRETE =	70.9		

TRUCK #3

POSITIVE MOMENT

TENSION STEEL =	12356.6	COMPRESSION CONCRETE =	449.1	STIRRUP STEEL =	0.0
COMPRESSION STEEL =	5960.5	SHEAR IN CONCRETE =	54.0		

SAMPLE PROBLEM NO. 1 CONCRETE T GIRDER BRIDGE 740370PFKR9DES

REINFORCING CONCRETE SECTION REVIEW

SPAN 1 @ 10 TENTH POINT

INPUT SECTION DIMENSIONS

DEPTH SECTION	50.75	TOP FLANGE THICKNESS	7.00	BOTTOM FLANGE THICKNESS	0.0
THICKNESS WEB	18.00	TOP FLANGE WIDTH	105.00	BOTTOM FLANGE WIDTH	0.0

INPUT REINFORCING DETAILS

AREA BOTTOM STEEL	3.12	AREA TOP STEEL	13.43	AREA STIRRUPS	0.40
DISTANCE FROM BOTTOM	3.00	DISTANCE FROM TOP	2.00	SPACING STIRRUPS	10.00

MATERIALS CONSTANTS

YIELD STRENGTH REINFORCING 40000. ULTIMATE STRENGTH CONCRETE 3000.
% CONCRETE IN SHEAR 100.%

APPLIED ACTIONS

	DEAD LOAD	TRUCK #1 POSITIVE	TRUCK #1 NEGATIVE	TRUCK #2 POSITIVE	TRUCK #2 NEGATIVE	TRUCK #3 POSITIVE	TRUCK #3 NEGATIVE
MOMENT Z-Z	-327.16	60.85	-325.72	55.54	-268.00	38.82	-341.77
SHEAR Y-Z	-34.82	-56.25		-44.36		-40.10	

ALLOWABLE STRESSES

TENSION STEEL =	20000.0	COMPRESSION CONCRETE =	1200.0	STIRRUP STEEL =	20000.0
COMPRESSION STEEL =	20000.0	SHEAR IN CONCRETE =	90.0		

ACTUAL STRESSES

TRUCK #1

NEGATIVE MOMENT

TENSION STEEL =	13479.8	COMPRESSION CONCRETE =	833.1	STIRRUP STEEL =	12109.5
COMPRESSION STEEL =	13976.8	SHEAR IN CONCRETE =	90.0		

SAMPLE PROBLEM NO. 1 CONCRETE T GIRDER BRIDGE 740370PEKR9DES

REINFORCING CONCRETE SECTION REVIEW

SPAN 1 @ 10 TENTH POINT -CONTINUED-

TRUCK #2

NEGATIVE MOMENT

TENSION STEEL =	12288.0	COMPRESSION CONCRETE =	759.4	STIRRUP STEEL =	5240.8
COMPRESSION STEEL =	12741.1	SHEAR IN CONCRETE =	90.0		

TRUCK #3

NEGATIVE MOMENT

TENSION STEEL =	13811.2	COMPRESSION CONCRETE =	853.5	STIRRUP STEEL =	2782.1
COMPRESSION STEEL =	14320.5	SHEAR IN CONCRETE =	90.0		

SAMPLE PROBLEM NO. 1 CONCRETE T GIRDER BRIDGE 740370PEKR9DES

REINFORCING CONCRETE SECTION REVIEW

SPAN 2 @ 0 TENTH POINT

INPUT SECTION DIMENSIONS

DEPTH SECTION	50.75	TOP FLANGE THICKNESS	7.00	BOTTOM FLANGE THICKNESS	0.0
THICKNESS WEB	18.00	TOP FLANGE WIDTH	105.00	BOTTOM FLANGE WIDTH	0.0

INPUT REINFORCING DETAILS

AREA BOTTOM STEEL	3.12	AREA TOP STEEL	13.43	AREA STIRRUPS	0.40
DISTANCE FROM BOTTOM	3.00	DISTANCE FROM TOP	2.00	SPACING STIRRUPS	10.00

MATERIALS CONSTANTS

YIELD STRENGTH REINFORCING 40000. ULTIMATE STRENGTH CONCRETE 3000.
% CONCRETE IN SHEAR 100.%

APPLIED ACTIONS

	DEAD LOAD	TRUCK #1 POSITIVE	TRUCK #1 NEGATIVE	TRUCK #2 POSITIVE	TRUCK #2 NEGATIVE	TRUCK #3 POSITIVE	TRUCK #3 NEGATIVE
MOMENT Z-Z	-329.17	90.11	-363.03	82.24	-299.24	57.48	-353.56
SHEAR Y-Z	34.42	56.19		43.88		40.76	

ALLOWABLE STRESSES

TENSION STEEL =	20000.0	COMPRESSION CONCRETE =	1200.0	STIRRUP STEEL =	20000.0
COMPRESSION STEEL =	20000.0	SHEAR IN CONCRETE =	90.0		

ACTUAL STRESSES

TRUCK #1

NEGATIVE MOMENT

TENSION STEEL =	14291.5	COMPRESSION CONCRETE =	883.2	STIRRUP STEEL =	11843.2
COMPRESSION STEEL =	14818.5	SHEAR IN CONCRETE =	90.0		

SAMPLE PROBLEM NO. 1 CONCRETE T GIRDER BRIDGE 740370PEKR9DES

REINFORCING CONCRETE SECTION REVIEW

SPAN 2 @ 0 TENTH POINT -CONTINUED-

TRUCK #2

NEGATIVE MOMENT

TENSION STEEL =	12974.5	COMPRESSION CONCRETE =	801.8	STIRRUP STEEL =	4735.2
COMPRESSION STEEL =	13452.9	SHEAR IN CONCRETE =	90.0		

TRUCK #3

NEGATIVE MOMENT

TENSION STEEL =	14096.1	COMPRESSION CONCRETE =	871.1	STIRRUP STEEL =	2933.4
COMPRESSION STEEL =	14615.8	SHEAR IN CONCRETE =	90.0		

SAMPLE PROBLEM NO. 1 CONCRETE T GIRDER BRIDGE 740370PEKR9DES

REINFORCING CONCRETE SECTION REVIEW

SPAN 2 @ .5 TENTH POINT

INPUT SECTION DIMENSIONS

DEPTH SECTION	27.00	TOP FLANGE THICKNESS	7.00	BOTTOM FLANGE THICKNESS	0.0
THICKNESS WEB	18.00	TOP FLANGE WIDTH	105.00	BOTTOM FLANGE WIDTH	0.0

INPUT REINFORCING DETAILS

AREA BOTTOM STEEL	12.48	AREA TOP STEEL	2.48	AREA STIRRUPS	0.40
DISTANCE FROM BOTTOM	5.00	DISTANCE FROM TOP	2.00	SPACING STIRRUPS	12.00

MATERIALS CONSTANTS

YIELD STRENGTH REINFORCING 40000. ULTIMATE STRENGTH CONCRETE 3000.
% CONCRETE IN SHEAR 100.%

APPLIED ACTIONS

	DEAD LOAD	TRUCK #1 POSITIVE	TRUCK #1 NEGATIVE	TRUCK #2 POSITIVE	TRUCK #2 NEGATIVE	TRUCK #3 POSITIVE	TRUCK #3 NEGATIVE
MOMENT Z-Z	81.81	235.13	-50.66	231.28	-46.24	166.82	-64.64
SHEAR Y-Z	-0.00	-19.49		-20.06		-13.84	

ALLOWABLE STRESSES

TENSION STEEL =	20000.0	COMPRESSION CONCRETE =	1200.0	STIRRUP STEEL =	20000.0
COMPRESSION STEEL =	20000.0	SHEAR IN CONCRETE =	90.0		

ACTUAL STRESSES

TRUCK #1

POSITIVE MOMENT

TENSION STEEL =	15213.7	COMPRESSION CONCRETE =	557.2	STIRRUP STEEL =	0.0
COMPRESSION STEEL =	7364.6	SHEAR IN CONCRETE =	54.1		

SAMPLE PROBLEM NO. 1 CONCRETE T GIRDER BRIDGE 740370PEKR9DES

REINFORCING CONCRETE SECTION REVIEW

SPAN 2 @ 5 TENTH POINT -CONTINUED-

TRUCK #2

POSITIVE MOMENT

TENSION STEEL	=	15028.9	COMPRESSION CONCRETE =	550.4	STIRRUP STEEL =	0.0
COMPRESSION STEEL	=	7275.2	SHEAR IN CONCRETE =	55.6		

TRUCK #3

POSITIVE MOMENT

TENSION STEEL	=	11935.0	COMPRESSION CONCRETE =	437.1	STIRRUP STEEL =	0.0
COMPRESSION STEEL	=	5777.5	SHEAR IN CONCRETE =	38.4		

SAMPLE PROBLEM NO. 1 CONCRETE T GIRDER BRIDGE 740370PEKR9DES

REINFORCING CONCRETE SECTION REVIEW

SPAN 8 @ 0 TENTH POINT

INPUT SECTION DIMENSIONS

DEPTH SECTION	36.00	TOP FLANGE THICKNESS	0.0	BOTTOM FLANGE THICKNESS	0.0
THICKNESS WEB	18.00	TOP FLANGE WIDTH	0.0	BOTTOM FLANGE WIDTH	0.0

INPUT REINFORCING DETAILS

AREA STEEL (AS1)	4.74	AREA STEEL (AS2)	4.74	AREA TIES	0.40
DISTANCE TO CENTROID	3.00	DISTANCE TO CENTROID	3.00	SPACING TIES	12.00

MATERIALS CONSTANTS

YIELD STRENGTH REINFORCING 40000. ULTIMATE STRENGTH CONCRETE 3000.
% CONCRETE IN SHEAR 100.%

APPLIED ACTIONS

	DEAD LOAD	TRUCK #1 POSITIVE	TRUCK #1 NEGATIVE	TRUCK #2 POSITIVE	TRUCK #2 NEGATIVE	TRUCK #3 POSITIVE	TRUCK #3 NEGATIVE
MOMENT Z-Z	2.01	120.42	-101.58	99.26	-92.71	76.61	-84.03
SHEAR Y-Z	-0.09	-5.15		-4.24		-4.00	
AXIAL X-X	71.14	0.0	0.0	0.0	0.0	0.0	0.0

ALLOWABLE STRESSES

TENSION STEEL =	20000.0	COMPRESSION CONCRETE =	1200.0	STIRRUP STEEL =	20000.0
COMPRESSION STEEL =	20000.0	SHEAR IN CONCRETE =	0.0		

ACTUAL STRESSES

TRUCK #1

POSITIVE MOMENT

TENSION STEEL =	5502.1	COMPRESSION CONCRETE =	482.9	STIRRUP STEEL =	0.0
COMPRESSION STEEL =	7780.4	SHEAR IN CONCRETE =	0.0		

NEGATIVE MOMENT

TENSION STEEL =	0.0	COMPRESSION CONCRETE =	347.0	STIRRUP STEEL =	0.0
COMPRESSION STEEL =	6018.3	SHEAR IN CONCRETE =	0.0		

SAMPLE PROBLEM NO. 1 CONCRETE T GIRDER BRIDGE 740370PEKR9DES

REINFORCING CONCRETE SECTION REVIEW

SPAN 3 @ 0 TENTH POINT -CONTINUED-

TRUCK #2

POSITIVE MOMENT

TENSION STEEL =	0.0	COMPRESSION CONCRETE =	351.7	STIRRUP STEEL =	0.0
COMPRESSION STEEL =	6096.7	SHEAR IN CONCRETE =	0.0		

NEGATIVE MOMENT

TENSION STEEL =	0.0	COMPRESSION CONCRETE =	322.4	STIRRUP STEEL =	0.0
COMPRESSION STEEL =	5607.8	SHEAR IN CONCRETE =	0.0		

TRUCK #3

POSITIVE MOMENT

TENSION STEEL =	0.0	COMPRESSION CONCRETE =	288.8	STIRRUP STEEL =	0.0
COMPRESSION STEEL =	5048.6	SHEAR IN CONCRETE =	0.0		

NEGATIVE MOMENT

TENSION STEEL =	0.0	COMPRESSION CONCRETE =	298.3	STIRRUP STEEL =	0.0
COMPRESSION STEEL =	5206.4	SHEAR IN CONCRETE =	0.0		

REINFORCING CONCRETE SECTION REVIEW

SPAN 8 @ 10 TENTH POINT

INPUT SECTION DIMENSIONS

DEPTH SECTION	18.00	TOP FLANGE THICKNESS	0.0	BOTTOM FLANGE THICKNESS	0.0
THICKNESS WEB	18.00	TOP FLANGE WIDTH	0.0	BOTTOM FLANGE WIDTH	0.0

INPUT REINFORCING DETAILS

AREA STEEL (AS1)	4.74	AREA STEEL (AS2)	4.74	AREA TIES	0.40
DISTANCE TO CENTROID	3.00	DISTANCE TO CENTROID	3.00	SPACING TIES	12.00

MATERIALS CONSTANTS

YIELD STRENGTH REINFORCING 40000. ULTIMATE STRENGTH CONCRETE 3000.
% CONCRETE IN SHEAR 100.%

APPLIED ACTIONS

	DEAD LOAD	TRUCK #1 POSITIVE	TRUCK #1 NEGATIVE	TRUCK #2 POSITIVE	TRUCK #2 NEGATIVE	TRUCK #3 POSITIVE	TRUCK #3 NEGATIVE
MOMENT Z-Z	0.0	0.0	0.0	0.0	0.0	0.0	0.0
SHEAR Y-Z	-0.09	-5.15		-4.24	-	-4.00	
AXIAL X-X	82.99	0.0	0.0	0.0	0.0	0.0	0.0

ALLOWABLE STRESSES

TENSION STEEL = 20000.0 COMPRESSION CONCRETE = 1200.0 STIRRUP STEEL = 20000.0
COMPRESSION STEEL = 20000.0 SHEAR IN CONCRETE = 0.0

ACTUAL STRESSES

TRUCK #1

SAMPLE PROBLEM NO. 1 CONCRETE T GIRDER BRIDGE 740370PEKR9DES

REINFORCING CONCRETE SECTION REVIEW

SPAN 8 @ 10 TENTH POINT -CONTINUED-
TRUCK #2
TRUCK #3
NOW CALLING 1BRSYS50

SAMPLE PROBLEM NO. 1 CONCRETE T GIRDER BRIDGE 740370PEKR9DES

INVENTORY RATING FOR SPAN 1 @ 4 TENTH (LOAD 1)

	POSITIVE STEEL	NEGATIVE STEEL	CONCRETE FLEXURE	STIRRUPS
POS M.	1.398	3.263	2.529	********
NEG M.	1.793	12.727	2.763	********

OPERATING RATING FOR SPAN 1 @ 4 TENTH (LOAD 1)

	POSITIVE STEEL	NEGATIVE STEEL	CONCRETE FLEXURE	STIRRUPS
POS M.	2.267	5.064	3.605	********
NEG M.	2.265	18.666	3.481	********

INVENTORY RATING FOR SPAN 1 @ 4 TENTH (LOAD 2)

	POSITIVE STEEL	NEGATIVE STEEL	CONCRETE FLEXURE	STIRRUPS
POS M.	1.345	3.140	2.434	********

OPERATING RATING FOR SPAN 1 @ 4 TENTH (LOAD 2)

	POSITIVE STEEL	NEGATIVE STEEL	CONCRETE FLEXURE	STIRRUPS
POS M.	2.182	4.873	3.469	********

INVENTORY RATING FOR SPAN 1 @ 10 TENTH (LOAD 1)

	POSITIVE STEEL	NEGATIVE STEEL	CONCRETE FLEXURE	STIRRUPS
NEG M.	1.970	1.864	1.883	2.055

OPERATING RATING FOR SPAN 1 @ 10 TENTH (LOAD 1)

	POSITIVE STEEL	NEGATIVE STEEL	CONCRETE FLEXURE	STIRRUPS
NEG M.	3.457	3.298	2.966	3.392

INVENTORY RATING FOR SPAN 1 @ 10 TENTH (LOAD 2)

	POSITIVE STEEL	NEGATIVE STEEL	CONCRETE FLEXURE	STIRRUPS
NEG M.	2.394	2.265	2.288	6.027

OPERATING RATING FOR SPAN 1 @ 10 TENTH (LOAD 2)

	POSITIVE STEEL	NEGATIVE STEEL	CONCRETE FLEXURE	STIRRUPS
NEG M.	4.201	4.008	3.604	9.433

INVENTORY RATING FOR SPAN 2 @ 0 TENTH (LOAD 1)

	POSITIVE STEEL	NEGATIVE STEEL	CONCRETE FLEXURE	STIRRUPS
NEG M.	1.762	1.667	1.684	2.111

OPERATING RATING FOR SPAN 2 @ 0 TENTH (LOAD 1)

	POSITIVE STEEL	NEGATIVE STEEL	CONCRETE FLEXURE	STIRRUPS
NEG M.	3.096	2.953	2.655	3.472

INVENTORY RATING FOR SPAN 2 @ 0 TENTH (LOAD 2)

	POSITIVE STEEL	NEGATIVE STEEL	CONCRETE FLEXURE	STIRRUPS
NEG M.	2.137	2.022	2.043	6.752

OPERATING RATING FOR SPAN 2 @ 0 TENTH (LOAD 2)

	POSITIVE STEEL	NEGATIVE STEEL	CONCRETE FLEXURE	STIRRUPS
NEG M.	3.756	3.583	3.221	10.521

INVENTORY RATING FOR SPAN 2 @ 5 TENTH (LOAD 1)

	POSITIVE STEEL	NEGATIVE STEEL	CONCRETE FLEXURE	STIRRUPS
POS M.	1.424	3.313	2.555	********

OPERATING RATING FOR SPAN 2 @ 5 TENTH (LOAD 1)

	POSITIVE STEEL	NEGATIVE STEEL	CONCRETE FLEXURE	STIRRUPS
POS M.	2.310	5.143	3.644	********

INVENTORY RATING FOR SPAN 2 @ 5 TENTH (LOAD 2)

	POSITIVE STEEL	NEGATIVE STEEL	CONCRETE FLEXURE	STIRRUPS
POS M.	1.448	3.368	2.598	********

OPERATING RATING FOR SPAN 2 @ 5 TENTH (LOAD 2)

	POSITIVE STEEL	NEGATIVE STEEL	CONCRETE FLEXURE	STIRRUPS
POS M.	2.349	5.229	3.704	********

INVENTORY RATING FOR SPAN 8 @ 0 TENTH (LOAD 1)

	POSITIVE STEEL	NEGATIVE STEEL	CONCRETE FLEXURE	STIRRUPS
POS M.	3.679	2.597	2.509	********
NEG M.	********	3.277	3.410	********

OPERATING RATING FOR SPAN 8 @ 0 TENTH (LOAD 1)

	POSITIVE STEEL	NEGATIVE STEEL	CONCRETE FLEXURE	STIRRUPS
POS M.	5.527	3.903	3.457	********
NEG M.	********	4.906	4.681	********

INVENTORY RATING FOR SPAN 8 @ 0 TENTH (LOAD 2)

	POSITIVE STEEL	NEGATIVE STEEL	CONCRETE FLEXURE	STIRRUPS
POS M.	********	3.327	3.461	********
NEG M.	********	3.511	3.664	********

OPERATING RATING FOR SPAN 8 @ 0 TENTH (LOAD 2)

	POSITIVE STEEL	NEGATIVE STEEL	CONCRETE FLEXURE	STIRRUPS
POS M.	********	5.000	4.766	********
NEG M.	********	5.256	5.029	********

INVENTORY RATING FOR CONCRETE DECK (LOAD 1)

	POSITIVE STEEL	NEGATIVE STEEL	CONCRETE FLEXURE	STIRRUPS
POS M.	1.154	9.112	1.209	********
NEG M.	0.850	4.336	1.022	********

OPERATING RATING FOR CONCRETE DECK (L

	POSITIVE STEEL	NEGATIVE STEEL	CONCRETE FLEXURE	STIRRUPS
POS M.	1.783	13.725	1.705	********
NEG M.	1.333	6.561	1.459	********

INVENTORY RATING FOR CONCRETE DECK (LOAD 2)

	POSITIVE STEEL	NEGATIVE STEEL	CONCRETE FLEXURE	STIRRUPS
POS M.	1.532	12.149	1.612	********
NEG M.	1.133	5.781	1.373	********

OPERATING RATING FOR CONCRETE DECK (L

	POSITIVE STEEL	NEGATIVE STEEL	CONCRETE FLEXURE	STIRRUPS
POS M.	2.385	18.300	2.274	********
NEG M.	1.777	8.749	1.945	********

SAMPLE PROBLEM NO. 1 CONCRETE T GIRDER BRIDGE 740370PEKR9DES

LOAD RATING SUMMARY SHEET

INVENTORY RATING

CONTROL POINT--CONCRETE SLAB (LOAD 1)

CONCRETE SECTION ; (POSITIVE STEEL)
NEGATIVE MOMENT RATING FACTOR = 0.850
LOAD RATING = 30.601 TONS

CONTROL POINT--CONCRETE SLAB (LOAD 2)

CONCRETE SECTION ; (POSITIVE STEEL)
NEGATIVE MOMENT RATING FACTOR = 1.133
LOAD RATING = 27.201 TONS

SAMPLE PROBLEM NO. 1 CONCRETE T GIRDER BRIDGE 740370PEKR9DES

LOAD RATING SUMMARY SHEET

OPERATING RATING

CONTROL POINT--SPAN 0 @ 0 TENTH (LOAD 1)

CONCRETE SECTION ; (POSITIVE STEEL)
POSITIVE MOMENT RATING FACTOR = 0.251
LOAD RATING = 9.035 TONS

CONTROL POINT--SPAN 0 @ 0 TENTH (LOAD 2)

CONCRETE SECTION ; (POSITIVE STEEL)
POSITIVE MOMENT RATING FACTOR = 0.251
LOAD RATING = 6.024 TONS

TOTAL WEIGHT OF LOAD TYPE 1 = 36.000 TONS
TOTAL WEIGHT OF LOAD TYPE 2 = 24.000 TONS

0
NOW CALLING IBPSYS00

4.4 WELDED PLATE GIRDER

Sample Problem #2 is the rating of a five span continuous welded plate girder bridge. The girder has two sections and changes abruptly from one to the other at approximate points of dead load inflection. The girder is hybrid over the supports and homogeneous in the positive moment regions. The girders support a 7 ½" reinforced concrete deck which is rated with the girders. The three trucks used for rating are HS-20-44, a Type 3S2 of 39.95 tons, and a Type 3 of 22 tons.

There is no wearing surface on the deck. Cantilever portions of the deck were not analyzed in this problem, but the program has the capability of analyzing the cantilever if input data is provided.

Compressive reinforcement is shown in the deck, but was not used in making the analysis. It can be entered at the option of the user.

It should be noted that when asking for design review points on the 100 cards of the DC001 section that the points are span dependent. For example, in this 5 span structure, to obtain the live load reaction, the 510 point would be asked for, not the 600. The 600 means the 0 tenth point of span 6 which does not exist. In this sample problem, the 200 point is asked for which is the left end of span 2. Therefore, live load moments do not appear for the 2.0L under "Maximum Moments, Shears, Reactions, and Deflections". To obtain the 2.0L, the 110 point must be requested.

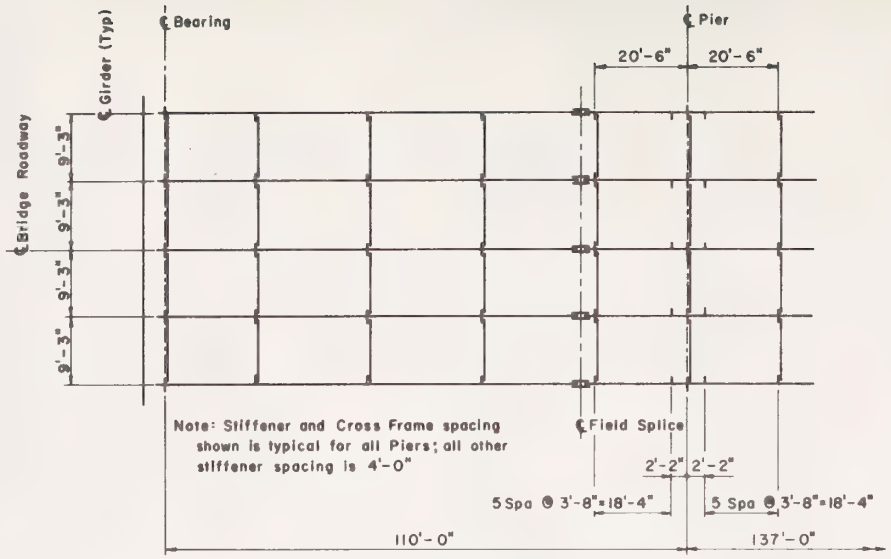

PARTIAL FRAMING PLAN

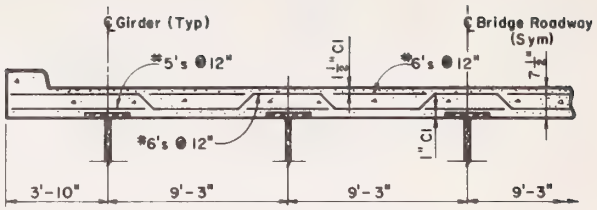

PARTIAL SECTION THRU DECK

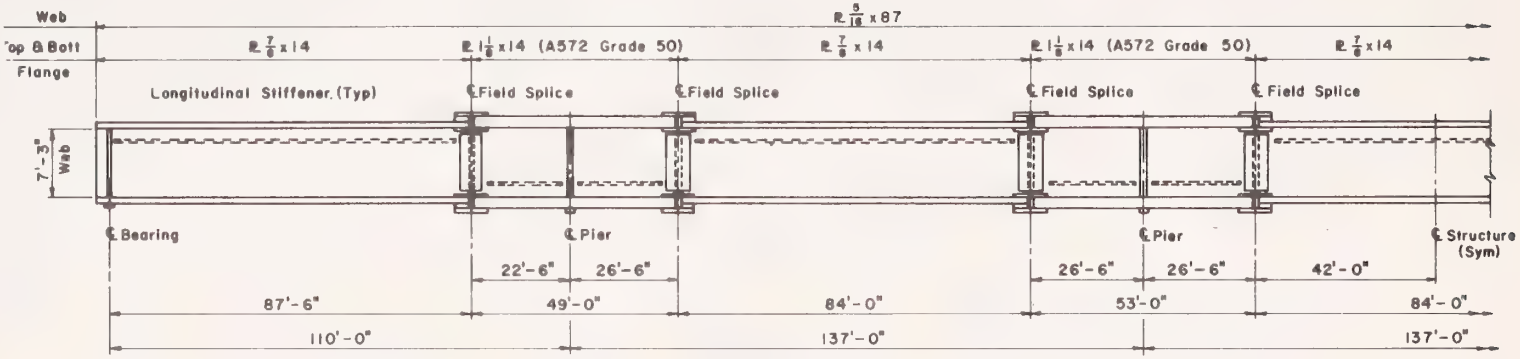

GIRDER ELEVATION

SAMPLE PROBLEM NO. 2 - WELDED PL GIRDER BRIDGE

FORM C-16
Rev. 3/11/69

WYOMING STATE HIGHWAY DEPARTMENT
CHEYENNE WYOMING
BRIDGE DIVISION

DESIGN SYSTEM

SHEET NO 1 OF 4
BY DAG DATE 9-27-73
CHECKED

//EXEC BRSYSØØ

Employee No. 68	Dept. Code	P or D	Job Code 75	Work Code	Str. No.
5857	7Ø	P	EKR9	DES	

I COMMENT CARD

1Ø,Ø	SAMPLE PROBLEM NO. 2 WELDED PL GIRDER BRIDGE

WORK CODE (1-2)	DATA CODE (3-5)	ENTRY 1 (6-15)	ENTRY 2 (25)	ENTRY 3 (35)	ENTRY 4 (45)	ENTRY 5 (55)	ENTRY 6 (65)	CONT (66)
DC	ØØ6	11.	8.	2.	2Ø.		.3	
	11		.75	.88			1.38	
	12	325Ø.	6ØØØØ.	.55	.55	.4	.4	
	13	9.25	14.	7.5	16.	9.	9.	
	14		15Ø.		1.88			
DC	ØØ1	Ø111Ø.	5.	2.				
	1ØØ	1Ø4.	2ØØ.	2Ø5.	3ØØ.	3Ø5.	4ØØ.	
	1ØØ	5ØØ.						
	1Ø1	1.	11Ø.	11Ø.		1.	87.	
	1Ø2	87.						
	1Ø5	87.5	1.	87.5	2.	11Ø.	2.	
	1Ø1	2.	137.	137.		1.	87.	
	1Ø2	87.						
	1Ø3	26.5	2.	26.5	1.	11Ø.5	1.	
	1Ø4	11Ø.5	2.	137.	2.			
	1Ø1	3.	137.	137.		1.	87.	
	1Ø2	87.						

TRAILER CARD

~~999~~	

NOTE: A trailer card must follow the last structure card containing data

FORM C-16
Rev. 3/11/69

WYOMING STATE HIGHWAY DEPARTMENT
CHEYENNE WYOMING
BRIDGE DIVISION

SHEET NO 2 OF 4
BY DAG DATE 9-27-73
CHECKED

//EXEC BRSYSØØ

DESIGN SYSTEM

Employee No. 68	Dept. Code	P or D	Job Code 75	Work Code	Str. No.

1 COMMENT CARD

~~ØØØ~~

1 WORK	2 CODE	3 DATA	5 CODE	ENTRY 1 (6–15)	ENTRY 2 (25)	ENTRY 3 (35)	ENTRY 4 (45)	ENTRY 5 (55)	ENTRY 6 (65)	66 CONT
		1Ø3		26.5	2.	26.5	1.	11Ø.5	1.	
		1Ø4		11Ø.5	2.	137.	2.			
		1Ø1		4.	137.	137.		1.	87.	
		1Ø2		87.						
		1Ø3		26.5	2.	26.5	1.	11Ø.5	1.	
		1Ø4		11Ø.5	2.	137.	2.			
		1Ø1		5.	11Ø.	11Ø.		1.	87.	
		1Ø2		87.						
		1Ø3		22.5	2.	22.5	1.	11Ø.	1.	
		111		1.	.3125	14.	14.	.875	.875	
		111		2.	.3125	14.	14.	1.125	1.125	
	DC	ØØ2		Ø111Ø.	1.6818	1ØØ.	35.	39.95	22.	
		2Ø1		.95	.49	29ØØØ.				
		3Ø1		13.	4.	14.	16.	14.	16.	
		3Ø2		3Ø.						
		3Ø1		23.	3.95	11.	9.	4.	9.	

TRAILER CARD

~~999~~

1 3

NOTE: A trailer card must follow the last structure card containing data

FORM C-16
Rev. 3/11/69

WYOMING STATE HIGHWAY DEPARTMENT
CHEYENNE WYOMING
BRIDGE DIVISION

SHEET NO 3 OF 4
BY DAG DATE 9-27-73
CHECKED

//EXEC BRSYSØØ

DESIGN SYSTEM

Employee No. 68	Dept. Code	P or D	Job Code 75	Work Code	Str. No.

1 COMMENT CARD

1	2	3	5	6–15	16–25	26–35	36–45	46–55	56–65	66
WORK	CODE	DATA	CODE	ENTRY 1	ENTRY 2	ENTRY 3	ENTRY 4	ENTRY 5	ENTRY 6	CONT
		3Ø2		29.	9.	4.	9.			
		3Ø1		23.	4.	15.	9.	4.	9.	
DC		ØØ5		11.	1.					
		5Ø1					.55			
		5Ø2					.75			
		51Ø		1.	1.	2.	1.			
		53Ø		1Ø4.	2.	36ØØØ.				1
		531			48.			1.		
		53Ø		2ØØ.	2.	36ØØØ.	5ØØØØ.	5ØØØØ.		1
		531			26.	1.25	6.75	1.	2Ø.5	
		53Ø		2Ø5.	2.	36ØØØ.				1
		531			48.			1.		
		53Ø		3ØØ.	2.	36ØØØ.	5ØØØØ.	5ØØØØ.		1
		531			26.	1.25	6.75	1.	2Ø.5	
		53Ø		3Ø5.	2.	36ØØØ.				1
		531			48.			1.		

TRAILER CARD

1 3

NOTE: A trailer card must follow the last structure card containing data

FORM C-16
Rev. 3/11/69

WYOMING STATE HIGHWAY DEPARTMENT
CHEYENNE WYOMING
BRIDGE DIVISION

DESIGN SYSTEM

SHEET NO 4 OF 4
BY DAG DATE 9-27-73
CHECKED

Employee No. 68	Dept. Code	P or D	Job Code 75	Work Code	Str. No.

//EXEC BRSYSØØ

1 COMMENT CARD

1	2	3	5							66
WORK	CODE	DATA	CODE	ENTRY 1 (6–15)	ENTRY 2 (25)	ENTRY 3 (35)	ENTRY 4 (45)	ENTRY 5 (55)	ENTRY 6 (65)	CONT
		53Ø		4ØØ.	2.	36ØØØ.	5ØØØØ.	5ØØØØ.		1
		531			26.	1.25	6.75	1.	2Ø.5	
		53Ø		5ØØ.	2.	36ØØØ.	5ØØØØ.	5ØØØØ.		1
		531			26.	1.25	6.75	1.	2Ø.5	

TRAILER CARD

1	3
9	9 9

NOTE: A trailer card must follow the last structure card containing data

YCMING HIGHWAY DEPARTMENT
BRIDGE DESIGN DIVISION

DATE
PAGE NO 1

SAMPLE PROBLEM NO. 2 WELDED PL GIRDER BRIDGE

585770PEKR9DES

INPUT AS RECEIVED BY COMPUTER

WORK CODE	DATA CODE	ENTRY 1	ENTRY 2	ENTRY 3	ENTRY 4	ENTRY 5	ENTRY 6	
DC	6	11.00000	8.00000	2.00000	20.00000	0.0	0.30000	
	11	0.0	0.75000	0.88000	0.0	0.0	1.38000	
	12	3250.00000	60000.00000	0.55000	0.55000	0.40000	0.40000	
	13	9.25000	14.00000	7.50000	16.00000	9.00000	9.00000	
	14	0.0	150.00000	0.0	1.68000	0.0	0.0	
DC	1	1110.00000	5.00000	2.00000	0.0	0.0	0.0	RC

SAMPLE PROBLEM NO. 2 WELDED PL GIRDER BRIDGE 585770PEKR9DES

STRESSES, MOMENTS, AND REQUIRED STEEL AREAS FOR REINFORCED CONCRETE DECK

ALLOWABLE STRESSES FOR INVENTORY RATING-- FS= 24000. PSI FC= 1300. PSI
ALLOWABLE STRESSES FOR OPERATING RATING-- FS= 33000. PSI FC= 1787. PSI

AS1= 0.0 SQ IN C1= 0.0 IN AS2= 0.75 SQ IN C2= 1.38 IN AS3= 0.88 SQ IN C3= 1.88 IN
AS4= 0.0 SQ IN C4= 0.0 IN AS5= 0.0 SQ IN C5= 0.0 IN AS6= 0.0 SQ IN C6= 0.0 IN

FIRST WHEEL LOAD (16.00 KIPS)

	POSITIVE MOMENT REGION IN SPANS	NEGATIVE MOMENT REGION IN SPANS	FIRST CANTILEVER	SECOND CANTILEVER
LIVE LOAD MOMENT=	5.547 K-FT	-5.547 K-FT	0.0 K-FT	0.0 K-FT
DEAD LOAD MOMENT=	0.704 K-FT	-0.704 K-FT	0.0 K-FT	0.0 K-FT
FS=	18.579 KSI	17.479 KSI	0.0 KSI	0.0 KSI
FSPRIME=	0.0 KSI	0.0 KSI	0.0 KSI	0.0 KSI
FC=	1.051 KSI	1.150 KSI	0.0 KSI	0.0 KSI
REQUIRED AS(TOP)	0.0 SQ IN/FT	0.880 SQ IN/FT	0.0 SQ IN/FT	0.0 SQ IN/FT
REQUIRED AS(BOT)	0.750 SQ IN/FT	0.0 SQ IN/FT	0.0 SQ IN/FT	0.0 SQ IN/FT

SECOND WHEEL LOAD (9.00 KIPS)

	POSITIVE MOMENT REGION IN SPANS	NEGATIVE MOMENT REGION IN SPANS	FIRST CANTILEVER	SECOND CANTILEVER
LIVE LOAD MOMENT=	3.120 K-FT	-3.120 K-FT	0.0 K-FT	0.0 K-FT
DEAD LOAD MOMENT=	0.704 K-FT	-0.704 K-FT	0.0 K-FT	0.0 K-FT
FS=	11.366 KSI	10.693 KSI	0.0 KSI	0.0 KSI
FSPRIME=	0.0 KSI	0.0 KSI	0.0 KSI	0.0 KSI
FC=	0.643 KSI	0.703 KSI	0.0 KSI	0.0 KSI
REQUIRED AS(TOP)	0.0 SQ IN/FT	0.880 SQ IN/FT	0.0 SQ IN/FT	0.0 SQ IN/FT
REQUIRED AS(BOT)	0.750 SQ IN/FT	0.0 SQ IN/FT	0.0 SQ IN/FT	0.0 SQ IN/FT

SAMPLE PROBLEM NO. 2 WELDED PL GIRDER BRIDGE 585770PEKR9DES

THIRD WHEEL LOAD (9.00 KIPS)

	POSITIVE MOMENT REGION IN SPANS	NEGATIVE MOMENT REGION IN SPANS	FIRST CANTILEVER	SECOND CANTILEVER
LIVE LOAD MOMENT=	3.120 K-FT	-3.120 K-FT	0.0 K-FT	0.0 K-FT
DEAD LOAD MOMENT=	0.704 K-FT	-0.704 K-FT	0.0 K-FT	0.0 K-FT
FS=	11.366 KSI	10.693 KSI	0.0 KSI	0.0 KSI
FSPRIME=	0.0 KSI	0.0 KSI	0.0 KSI	0.0 KSI
FC=	0.643 KSI	0.703 KSI	0.0 KSI	0.0 KSI
REQUIRED AS(TOP)	0.0 SQ IN/FT	0.880 SQ IN/FT	0.0 SQ IN/FT	0.0 SQ IN/FT
REQUIRED AS(BOT)	0.750 SQ IN/FT	0.0 SQ IN/FT	0.0 SQ IN/FT	0.0 SQ IN/FT

NOW CALLING 1BRSYS00

WYOMING HIGHWAY DEPARTMENT
BRIDGE DESIGN DIVISION

DATE
PAGE NO. 4

SAMPLE PROBLEM NO. 2 WELDED PL GIRDER BRIDGE 585770PEKR9DES

INPUT AS RECEIVED BY COMPUTER

WORK CODE	DATA CODE	ENTRY 1	ENTRY 2	ENTRY 3	ENTRY 4	ENTRY 5	ENTRY 6
DC	1	1110.00000	5.00000	2.00000	0.0	0.0	0.0
	100	104.00000	200.00000	205.00000	300.00000	305.00000	400.00000
	100	500.00000	0.0	0.0	0.0	0.0	0.0
	101	1.00000	110.00000	110.00000	0.0	1.00000	87.00000
	102	87.00000	0.0	0.0	0.0	0.0	0.0
	103	87.50000	1.00000	87.50000	2.00000	110.00000	2.00000
	101	2.00000	137.00000	137.00000	0.0	1.00000	87.00000
	102	87.00000	0.0	0.0	0.0	0.0	0.0
	103	26.50000	2.00000	26.50000	1.00000	110.50000	1.00000
	104	110.50000	2.00000	137.00000	2.00000	0.0	0.0
	101	3.00000	137.00000	137.00000	0.0	1.00000	87.00000
	102	87.00000	0.0	0.0	0.0	0.0	0.0
	103	26.50000	2.00000	26.50000	1.00000	110.50000	1.00000
	104	110.50000	2.00000	137.00000	2.00000	0.0	0.0
	101	4.00000	137.00000	137.00000	0.0	1.00000	87.00000
	102	87.00000	0.0	0.0	0.0	0.0	0.0
	103	26.50000	2.00000	26.50000	1.00000	110.50000	1.00000
	104	110.50000	2.00000	137.00000	2.00000	0.0	0.0
	101	5.00000	110.00000	110.00000	0.0	1.00000	87.00000
	102	87.00000	0.0	0.0	0.0	0.0	0.0
	103	22.50000	2.00000	22.50000	1.00000	110.00000	1.00000
	111	1.00000	0.31250	14.00000	14.00000	0.87500	0.87500
	111	2.00000	0.31250	14.00000	14.00000	1.12500	1.12500

SAMPLE PROBLEM NO. 2 WELDED PL GIRDER BRIDGE 585770PEKR9DES

BEAM PROPERTIES STRAGHT LINE DEPTH VARIATION.

SPAN NO. 1 SPAN LENGTH = 110.000 SPAN RATIO = 1.000

POINT	BEAM DEPTH	XSECT AREA	MOMENTS OF INERTIA	DIST TO CENT(X)	WIDTH OF WEB	FLANGE THICKNESS TOP	FLANGE THICKNESS BOT	FLANGE WIDTH TOP	FLANGE WIDTH BOT
1.00	87.00	51.7	64447.	44.4	0.313	0.875	0.875	14.00	14.00
1.05	87.00	51.7	64447.	44.4	0.313	0.875	0.875	14.00	14.00
1.10	87.00	51.7	64447.	44.4	0.313	0.875	0.875	14.00	14.00
1.15	87.00	51.7	64447.	44.4	0.313	0.875	0.875	14.00	14.00
1.20	87.00	51.7	64447.	44.4	0.313	0.875	0.875	14.00	14.00
1.25	87.00	51.7	64447.	44.4	0.313	0.875	0.875	14.00	14.00
1.30	87.00	51.7	64447.	44.4	0.313	0.875	0.875	14.00	14.00
1.35	87.00	51.7	64447.	44.4	0.313	0.875	0.875	14.00	14.00
1.40	87.00	51.7	64447.	44.4	0.313	0.875	0.875	14.00	14.00
1.45	87.00	51.7	64447.	44.4	0.313	0.875	0.875	14.00	14.00
1.50	87.00	51.7	64447.	44.4	0.313	0.875	0.875	14.00	14.00
1.55	87.00	51.7	64447.	44.4	0.313	0.875	0.875	14.00	14.00
1.60	87.00	51.7	64447.	44.4	0.313	0.875	0.875	14.00	14.00
1.65	87.00	51.7	64447.	44.4	0.313	0.875	0.875	14.00	14.00
1.70	87.00	51.7	64447.	44.4	0.313	0.875	0.875	14.00	14.00
1.75	87.00	51.7	64447.	44.4	0.313	0.875	0.875	14.00	14.00
1.80	87.00	58.7	78309.	44.6	0.313	1.125	1.125	14.00	14.00
1.85	87.00	58.7	78309.	44.6	0.313	1.125	1.125	14.00	14.00
1.90	87.00	58.7	78309.	44.6	0.313	1.125	1.125	14.00	14.00
1.95	87.00	58.7	78309.	44.6	0.313	1.125	1.125	14.00	14.00
2.00	87.00	58.7	78309.	44.6	0.313	1.125	1.125	14.00	14.00

	FIXED END MOMENTS FAC	FCA
1.10	-0.0806	0.0099
1.20	-0.1267	0.0351
1.30	-0.1445	0.0690
1.40	-0.1403	0.1048
1.50	-0.1204	0.1358
1.60	-0.0911	0.1552
1.70	-0.0587	0.1565
1.80	-0.0294	0.1332
1.90	-0.0082	0.0824

STIFFNESS KAC= 4.0851 KCA= 4.5048

CARRY OVERS CAC= 0.5396 CCA= 0.4893

SAMPLE PROBLEM NO. 2 WELDED PL GIRDER BRIDGE 585770PEKR9DES

BEAM PROPERTIES STRAGHT LINE DEPTH VARIATION.

SPAN NO. 2 SPAN LENGTH = 137.000 SPAN RATIO = 1.245

POINT	BEAM DEPTH	XSECT AREA	MOMENTS OF INERTIA	DIST TO CENT(X)	WIDTH OF WEB	FLANGE THICKNESS TOP	FLANGE THICKNESS BOT	FLANGE WIDTH TOP	FLANGE WIDTH BOT
2.00	87.00	58.7	78309.	44.6	0.313	1.125	1.125	14.00	14.00
2.05	87.00	58.7	78309.	44.6	0.313	1.125	1.125	14.00	14.00
2.10	87.00	58.7	78309.	44.6	0.313	1.125	1.125	14.00	14.00
2.15	87.00	58.7	78309.	44.6	0.313	1.125	1.125	14.00	14.00
2.20	87.00	51.7	64447.	44.4	0.313	0.875	0.875	14.00	14.00
2.25	87.00	51.7	64447.	44.4	0.313	0.875	0.875	14.00	14.00
2.30	87.00	51.7	64447.	44.4	0.313	0.875	0.875	14.00	14.00
2.35	87.00	51.7	64447.	44.4	0.313	0.875	0.875	14.00	14.00
2.40	87.00	51.7	64447.	44.4	0.313	0.875	0.875	14.00	14.00
2.45	87.00	51.7	64447.	44.4	0.313	0.875	0.875	14.00	14.00
2.50	87.00	51.7	64447.	44.4	0.313	0.875	0.875	14.00	14.00
2.55	87.00	51.7	64447.	44.4	0.313	0.875	0.875	14.00	14.00
2.60	87.00	51.7	64447.	44.4	0.313	0.875	0.875	14.00	14.00
2.65	87.00	51.7	64447.	44.4	0.313	0.875	0.875	14.00	14.00
2.70	87.00	51.7	64447.	44.4	0.313	0.875	0.875	14.00	14.00
2.75	87.00	51.7	64447.	44.4	0.313	0.875	0.875	14.00	14.00
2.80	87.00	51.7	64447.	44.4	0.313	0.875	0.875	14.00	14.00
2.85	87.00	58.7	78309.	44.6	0.313	1.125	1.125	14.00	14.00
2.90	87.00	58.7	78309.	44.6	0.313	1.125	1.125	14.00	14.00
2.95	87.00	58.7	78309.	44.6	0.313	1.125	1.125	14.00	14.00
3.00	87.00	58.7	78309.	44.6	0.313	1.125	1.125	14.00	14.00

	FIXED END MOMENTS FCE	FEC
2.10	-0.1026	0.0110
2.20	-0.1656	0.0394
2.30	-0.1921	0.0794
2.40	-0.1882	0.1232
2.50	-0.1623	0.1623
2.60	-0.1232	0.1882
2.70	-0.0794	0.1921
2.80	-0.0394	0.1656
2.90	-0.0110	0.1026

STIFFNESS KCE= 3.6211 KEC= 3.6211

CARRY OVERS CCE= 0.5268 CEC= 0.5268

SAMPLE PROBLEM NO. 2 WELDED PL GIRDER BRIDGE 585770PEKR9DES

BEAM PROPERTIES STRAGHT LINE DEPTH VARIATION.

SPAN NO. 3 SPAN LENGTH = 137.000 SPAN RATIO = 1.245

POINT	BEAM DEPTH	XSECT AREA	MOMENTS OF INERTIA	DIST TO CENT(X)	WIDTH OF WEB	FLANGE THICKNESS TOP	FLANGE THICKNESS BOT	FLANGE WIDTH TOP	FLANGE WIDTH BOT
3.00	87.00	58.7	78309.	44.6	0.313	1.125	1.125	14.00	14.00
3.05	87.00	58.7	78309.	44.6	0.313	1.125	1.125	14.00	14.00
3.10	87.00	58.7	78309.	44.6	0.313	1.125	1.125	14.00	14.00
3.15	87.00	58.7	78309.	44.6	0.313	1.125	1.125	14.00	14.00
3.20	87.00	51.7	64447.	44.4	0.313	0.875	0.875	14.00	14.00
3.25	87.00	51.7	64447.	44.4	0.313	0.875	0.875	14.00	14.00
3.30	87.00	51.7	64447.	44.4	0.313	0.875	0.875	14.00	14.00
3.35	87.00	51.7	64447.	44.4	0.313	0.875	0.875	14.00	14.00
3.40	87.00	51.7	64447.	44.4	0.313	0.875	0.875	14.00	14.00
3.45	87.00	51.7	64447.	44.4	0.313	0.875	0.875	14.00	14.00
3.50	87.00	51.7	64447.	44.4	0.313	0.875	0.875	14.00	14.00
3.55	87.00	51.7	64447.	44.4	0.313	0.875	0.875	14.00	14.00
3.60	87.00	51.7	64447.	44.4	0.313	0.875	0.875	14.00	14.00
3.65	87.00	51.7	64447.	44.4	0.313	0.875	0.875	14.00	14.00
3.70	87.00	51.7	64447.	44.4	0.313	0.875	0.875	14.00	14.00
3.75	87.00	51.7	64447.	44.4	0.313	0.875	0.875	14.00	14.00
3.80	87.00	51.7	64447.	44.4	0.313	0.875	0.875	14.00	14.00
3.85	87.00	58.7	78309.	44.6	0.313	1.125	1.125	14.00	14.00
3.90	87.00	58.7	78309.	44.6	0.313	1.125	1.125	14.00	14.00
3.95	87.00	58.7	78309.	44.6	0.313	1.125	1.125	14.00	14.00
4.00	87.00	58.7	78309.	44.6	0.313	1.125	1.125	14.00	14.00

	FIXED END MOMENTS FEG	FGE
3.10	-0.1026	0.0110
3.20	-0.1656	0.0394
3.30	-0.1921	0.0794
3.40	-0.1882	0.1232
3.50	-0.1623	0.1623
3.60	-0.1232	0.1882
3.70	-0.0794	0.1921
3.80	-0.0394	0.1656
3.90	-0.0110	0.1026

STIFFNESS KEG= 3.6211 KGE= 3.6211

CARRY OVERS CEG= 0.5268 CGE= 0.5268

SAMPLE PROBLEM NO. 2 WELDED PL GIRDER BRIDGE 585770PEKR9DES

BEAM PROPERTIES STRAGHT LINE DEPTH VARIATION.

SPAN NO. 4 SPAN LENGTH = 137.000 SPAN RATIO = 1.245

POINT	BEAM DEPTH	XSECT AREA	MOMENTS OF INERTIA	DIST TO CENT(X)	WIDTH OF WEB	FLANGE THICKNESS TOP	FLANGE THICKNESS BOT	FLANGE WIDTH TOP	FLANGE WIDTH BOT
4.00	87.00	58.7	78309.	44.6	0.313	1.125	1.125	14.00	14.00
4.05	87.00	58.7	78309.	44.6	0.313	1.125	1.125	14.00	14.00
4.10	87.00	58.7	78309.	44.6	0.313	1.125	1.125	14.00	14.00
4.15	87.00	58.7	78309.	44.6	0.313	1.125	1.125	14.00	14.00
4.20	87.00	51.7	64447.	44.4	0.313	0.875	0.875	14.00	14.00
4.25	87.00	51.7	64447.	44.4	0.313	0.875	0.875	14.00	14.00
4.30	87.00	51.7	64447.	44.4	0.313	0.875	0.875	14.00	14.00
4.35	87.00	51.7	64447.	44.4	0.313	0.875	0.875	14.00	14.00
4.40	87.00	51.7	64447.	44.4	0.313	0.875	0.875	14.00	14.00
4.45	87.00	51.7	64447.	44.4	0.313	0.875	0.875	14.00	14.00
4.50	87.00	51.7	64447.	44.4	0.313	0.875	0.875	14.00	14.00
4.55	87.00	51.7	64447.	44.4	0.313	0.875	0.875	14.00	14.00
4.60	87.00	51.7	64447.	44.4	0.313	0.875	0.875	14.00	14.00
4.65	87.00	51.7	64447.	44.4	0.313	0.875	0.875	14.00	14.00
4.70	87.00	51.7	64447.	44.4	0.313	0.875	0.875	14.00	14.00
4.75	87.00	51.7	64447.	44.4	0.313	0.875	0.875	14.00	14.00
4.80	87.00	51.7	64447.	44.4	0.313	0.875	0.875	14.00	14.00
4.85	87.00	58.7	78309.	44.6	0.313	1.125	1.125	14.00	14.00
4.90	87.00	58.7	78309.	44.6	0.313	1.125	1.125	14.00	14.00
4.95	87.00	58.7	78309.	44.6	0.313	1.125	1.125	14.00	14.00
5.00	87.00	58.7	78309.	44.6	0.313	1.125	1.125	14.00	14.00

FIXED END MOMENTS STIFFNESS CARRY OVERS

KGI= 3.6211 KIG= 3.6211 CGI= 0.5268 CIG= 0.5268

	FGI	FIG
4.10	-0.1026	0.0110
4.20	-0.1656	0.0394
4.30	-0.1921	0.0794
4.40	-0.1882	0.1232
4.50	-0.1623	0.1623
4.60	-0.1232	0.1882
4.70	-0.0794	0.1921
4.80	-0.0394	0.1656
4.90	-0.0110	0.1026

SAMPLE PROBLEM NO. 2 WELDED PL GIRDER BRIDGE 585770PEKR9DES

BEAM PROPERTIES STRAGHT LINE DEPTH VARIATION.

SPAN NO. 5 SPAN LENGTH = 110.000 SPAN RATIO = 1.000

POINT	BEAM DEPTH	XSECT AREA	MOMENTS OF INERTIA	DIST TO CENT(X)	WIDTH OF WEB	FLANGE THICKNESS TOP	FLANGE THICKNESS BOT	FLANGE WIDTH TOP	FLANGE WIDTH BOT
5.00	87.00	58.7	78309.	44.6	0.313	1.125	1.125	14.00	14.00
5.05	87.00	58.7	78309.	44.6	0.313	1.125	1.125	14.00	14.00
5.10	87.00	58.7	78309.	44.6	0.313	1.125	1.125	14.00	14.00
5.15	87.00	58.7	78309.	44.6	0.313	1.125	1.125	14.00	14.00
5.20	87.00	58.7	78309.	44.6	0.313	1.125	1.125	14.00	14.00
5.25	87.00	51.7	64447.	44.4	0.313	0.875	0.875	14.00	14.00
5.30	87.00	51.7	64447.	44.4	0.313	0.875	0.875	14.00	14.00
5.35	87.00	51.7	64447.	44.4	0.313	0.875	0.875	14.00	14.00
5.40	87.00	51.7	64447.	44.4	0.313	0.875	0.875	14.00	14.00
5.45	87.00	51.7	64447.	44.4	0.313	0.875	0.875	14.00	14.00
5.50	87.00	51.7	64447.	44.4	0.313	0.875	0.875	14.00	14.00
5.55	87.00	51.7	64447.	44.4	0.313	0.875	0.875	14.00	14.00
5.60	87.00	51.7	64447.	44.4	0.313	0.875	0.875	14.00	14.00
5.65	87.00	51.7	64447.	44.4	0.313	0.875	0.875	14.00	14.00
5.70	87.00	51.7	64447.	44.4	0.313	0.875	0.875	14.00	14.00
5.75	87.00	51.7	64447.	44.4	0.313	0.875	0.875	14.00	14.00
5.80	87.00	51.7	64447.	44.4	0.313	0.875	0.875	14.00	14.00
5.85	87.00	51.7	64447.	44.4	0.313	0.875	0.875	14.00	14.00
5.90	87.00	51.7	64447.	44.4	0.313	0.875	0.875	14.00	14.00
5.95	87.00	51.7	64447.	44.4	0.313	0.875	0.875	14.00	14.00
6.00	87.00	51.7	64447.	44.4	0.313	0.875	0.875	14.00	14.00

	FIXED END MOMENTS FIK	FKI
5.10	-0.0824	0.0082
5.20	-0.1332	0.0294
5.30	-0.1565	0.0587
5.40	-0.1552	0.0911
5.50	-0.1358	0.1204
5.60	-0.1048	0.1403
5.70	-0.0690	0.1445
5.80	-0.0351	0.1267
5.90	-0.0099	0.0806

STIFFNESS KIK= 4.5048 KKI= 4.0851

CARRY OVERS CIK= 0.4893 CKI= 0.5396

SAMPLE PROBLEM NO. 2 WELDED PL GIRDER BRIDGE 585770PEKR9DES

STIFFNESS AND CARRYOVER FACTORS AS USED IN MATRIX INVERSION

SPAN NO.	STIFFNESS	CARRYOVERS	STIFFNESS
1	KAC=0.408506E 01	CAC=0.539594E 00	KCA=0.450483E 01
2	KCE=0.362108E 01	CCE=0.526808E 00	KEC=0.362109E 01
3	KEG=0.362108E 01	CEG=0.526808E 00	KGE=0.362109E 01
4	KGI=0.362108E 01	CGI=0.526808E 00	KIG=0.362109E 01
5	KIK=0.450482E 01	CIK=0.489316E 00	KKI=0.408508E 01
6	KKM=0.100000E-09	CKM=0.100000E 01	KMK=0.100000E-09
7	KAB=0.100000E-09	CAB=0.100000E 01	KBA=0.100000E-09
8	KCD=0.100000E-09	CCD=0.100000E 01	KDC=0.100000E-09
9	KEF=0.100000E-09	CEF=0.100000E 01	KFE=0.100000E-09
10	KGH=0.100000E-09	CGH=0.100000E 01	KHG=0.100000E-09
11	KIJ=0.100000E-09	CIJ=0.100000E 01	KJI=0.100000E-09
12	KKL=0.100000E-09	CKL=0.100000E 01	KLK=0.100000E-09
13	KMN=0.100000E-09	CMN=0.100000E 01	KNM=0.100000E-09
14	KBD=0.100000E-09	CBD=0.100000E 01	KDB=0.100000E-09
15	KDF=0.100000E-09	CDF=0.100000E 01	KFD=0.100000E-09
16	KFH=0.100000E-09	CFH=0.100000E 01	KHF=0.100000E-09
17	KHJ=0.100000E-09	CHJ=0.100000E 01	KJH=0.100000E-09
18	KJL=0.100000E-09	CJL=0.100000E 01	KLJ=0.100000E-09
19	KLN=0.100000E-09	CLN=0.100000E 01	KNL=0.100000E-09

SAMPLE PROBLEM NO. 2 WELDED PL GIRDER BRIDGE 585770PEKR9DES

2 4 1CT

CELL 8 ANALYSIS

```
MCA=+ 0.4814FCA+ 0.1476FEC+-0.0419FGE+ 0.0115FIG+-0.0062FKI+-0.2598FCA+-0.5186FCE+ 0.1476FEG+-0.0419FGI+
    + 0.0115FIK+-0.0062FKM+ 0.0062FMK+ 0.0        0.0        0.0        0.0        0.0        0.0
MEC=+-0.1371FCA+ 0.4986FEC+ 0.1424FGE+-0.0392FIG+ 0.0211FKI+ 0.0740FCA+-0.1371FCE+-0.5014FEG+ 0.1424FGI+
    +-0.0392FIK+ 0.0211FKM+-0.0211FMK+ 0.0        0.0        0.0        0.0        0.0        0.0
MGE=+ 0.0392FCA+-0.1424FEC+ 0.5014FGE+ 0.1371FIG+-0.0740FKI+-0.0211FCA+ 0.0392FCE+-0.1424FEG+-0.4986FGI+
    + 0.1371FIK+-0.0740FKM+ 0.0740FMK+ 0.0        0.0        0.0        0.0        0.0        0.0
MIG=+-0.0115FCA+ 0.0419FEC+-0.1476FGE+ 0.5186FIG+ 0.2598FKI+ 0.0062FCA+-0.0115FCE+ 0.0419FEG+-0.1476FGI+
    +-0.4814FIK+ 0.2598FKM+-0.2598FMK+ 0.0        0.0        0.0        0.0        0.0        0.0
MKI=+ 0.0    FCA+ 0.0000FEC+ 0.0000FGE+-0.0000FIG+ 0.0    FKI+ 0.0    FCA+ 0.0    FCE+ 0.0000FEG+ 0.0000FGI+
    +-0.0000FIK+-1.0000FKM+ 1.0000FMK+ 0.0        0.0        0.0        0.0        0.0        0.0
```

SAMPLE PROBLEM NO. 2 WELDED PL GIRDER BRIDGE 585770PEKR9DES

2 4 1CT

CELL 8 ANALYSIS

NOW CALLING 1BRSYS00

SAMPLE PROBLEM NO. 2 WELDED PL GIRDER BRIDGE 585770PEKR9DES
INPUT AS RECEIVED BY COMPUTER

WORK CODE	DATA CODE	ENTRY 1	ENTRY 2	ENTRY 3	ENTRY 4	ENTRY 5	ENTRY 6
DC	2	1110.00000	1.68180	100.00000	35.00000	39.95000	22.00000
	201	0.95000	0.49000	29000.00000	0.0	0.0	0.0
	301	13.00000	4.00000	14.00000	16.00000	14.00000	16.00000
	302	30.00000	0.0	0.0	0.0	0.0	0.0
	301	23.00000	3.95000	11.00000	9.00000	4.00000	9.00000
	302	29.00000	9.00000	4.00000	9.00000	0.0	0.0
	301	23.00000	4.00000	15.00000	9.00000	4.00000	9.00000
DC	5	11.00000	1.00000	0.0	0.0	0.0	0.0

NOW CALLING 1BRSYS21

NOW CALLING 1BRSYS31

NOW CALLING 1BRSYS24

NOW CALLING 1BRSYS22

SAMPLE PROBLEM NO. 2 WELDED PL GIRDER BRIDGE 585770PEKR9DES

** GIRDER MOMENTS, SHEARS, AND REACTIONS **

SPAN LENGTH OF NO. 1=110.00 FT
GIRDER WEIGHT= 0.18 KIPS/FT SUPERIMPOSED DEAD LOAD= 0.95 KIPS/FT E(MODULUS)= 29000 KIPS/SQ IN
LIVE LOAD WHEEL FRACTION= 1.68

	DEAD LOAD GIRDER			SUPERIMPOSED DEAD LOAD			POINT LOADING			
POINT	REACTION	SHEAR	MOMENT	REACTION	SHEAR	MOMENT	LOADING	REACTION	SHEAR	MOMENT
1.0R	7.150	7.150	0.0	38.460	38.460	0.0		0.0	0.0	0.0
1.1		5.216	0.0		28.010	0.0			0.0	0.0
1.2		3.281	0.0		17.560	0.0			0.0	0.0
1.3		1.346	0.0		7.110	0.0			0.0	0.0
1.4		-0.589	144.36		-3.340	772.62			0.0	0.0
1.5		-2.523	0.0		-13.790	0.0			0.0	0.0
1.6		-4.458	0.0		-24.240	0.0			0.0	0.0
1.7		-6.393	0.0		-34.690	0.0			0.0	0.0
1.8		-8.589	0.0		-45.140	0.0			0.0	0.0
1.9		-10.786	0.0		-55.590	0.0			0.0	0.0
2.0L	25.390	-12.721	-286.20	131.060	-66.040	-1516.94		0.0	0.0	0.0

	TRUCK LOAD 1				TRUCK LOAD 2				TRUCK LOAD 3			
POINT	REACTION	SHEAR	+MOMENT	-MOMENT	REACTION	SHEAR	+MOMENT	-MOMENT	REACTION	SHEAR	+MOMENT	-MOMENT
1.0R	0.0	0.0	0.0	0.0	0.0	0.0	0.0	0.0	0.0	0.0	0.0	0.0
1.1		0.0	0.0	0.0		0.0	0.0	0.0		0.0	0.0	0.0
1.2		0.0	0.0	0.0		0.0	0.0	0.0		0.0	0.0	0.0
1.3		0.0	0.0	0.0		0.0	0.0	0.0		0.0	0.0	0.0
1.4		31.053	1399.6	-364.19		26.080	1272.7	-374.77		20.793	921.1	-224.51
1.5		0.0	0.0	0.0		0.0	0.0	0.0		0.0	0.0	0.0
1.6		0.0	0.0	0.0		0.0	0.0	0.0		0.0	0.0	0.0
1.7		0.0	0.0	0.0		0.0	0.0	0.0		0.0	0.0	0.0
1.8		0.0	0.0	0.0		0.0	0.0	0.0		0.0	0.0	0.0
1.9		0.0	0.0	0.0		0.0	0.0	0.0		0.0	0.0	0.0
2.0L	0.0	0.0	0.0	0.0	0.0	0.0	0.0	0.0	0.0	0.0	0.0	0.0

NOTE, -MOMENT IS A MOMENT THAT CAUSES TENSION ON THE OUTSIDE OF THE STRUCTURE

SAMPLE PROBLEM NO. 2 WELDED PL GIRDER BRIDGE 585770PEKR9DES

** GIRDER MOMENTS, SHEARS, AND REACTIONS **

SPAN LENGTH OF NO. 2=137.00 FT
GIRDER WEIGHT= 0.18 KIPS/FT SUPERIMPOSED DEAD LOAD= 0.95 KIPS/FT E(MODULUS)= 29000 KIPS/SQ IN
LIVE LOAD WHEEL FRACTION= 1.08

	DEAD LOAD GIRDER			SUPERIMPOSED DEAD LOAD			POINT LOADING			
POINT	REACTION	SHEAR	MOMENT	REACTION	SHEAR	MOMENT	LOADING	REACTION	SHEAR	MOMENT
2.0R	25.390	12.375	-286.20	131.060	65.020	-1516.94		0.0	0.0	0.0
2.1		9.639	0.0		52.005	0.0			0.0	0.0
2.2		7.230	0.0		38.990	0.0			0.0	0.0
2.3		4.820	0.0		25.975	0.0			0.0	0.0
2.4		2.411	0.0		12.960	0.0			0.0	0.0
2.5		0.001	130.98		-0.055	708.10			0.0	0.0
2.6		-2.409	0.0		-13.070	0.0			0.0	0.0
2.7		-4.818	0.0		-26.085	0.0			0.0	0.0
2.8		-7.228	0.0		-39.100	0.0			0.0	0.0
2.9		-9.964	0.0		-52.115	0.0			0.0	0.0
3.0L	25.073	-12.373	-286.05	130.205	-65.130	-1524.49		0.0	0.0	0.0

	TRUCK LOAD 1				TRUCK LOAD 2				TRUCK LOAD 3			
POINT	REACTION	SHEAR	+MOMENT	-MOMENT	REACTION	SHEAR	+MOMENT	-MOMENT	REACTION	SHEAR	+MOMENT	-MOMENT
2.0R	71.331	68.419	254.43	-901.80	77.180	69.251	261.81	-928.00	43.787	42.834	156.85	-555.94
2.1		0.0	0.0	0.0		0.0	0.0	0.0		0.0	0.0	0.0
2.2		0.0	0.0	0.0		0.0	0.0	0.0		0.0	0.0	0.0
2.3		0.0	0.0	0.0		0.0	0.0	0.0		0.0	0.0	0.0
2.4		0.0	0.0	0.0		0.0	0.0	0.0		0.0	0.0	0.0
2.5		30.524	1371.6	-307.48		26.131	1255.4	-316.39		20.267	908.2	-189.55
2.6		0.0	0.0	0.0		0.0	0.0	0.0		0.0	0.0	0.0
2.7		0.0	0.0	0.0		0.0	0.0	0.0		0.0	0.0	0.0
2.8		0.0	0.0	0.0		0.0	0.0	0.0		0.0	0.0	0.0
2.9		0.0	0.0	0.0		0.0	0.0	0.0		0.0	0.0	0.0
3.0L	0.0	0.0	0.0	0.0	0.0	0.0	0.0	0.0	0.0	0.0	0.0	0.0

NOTE. -MOMENT IS A MOMENT THAT CAUSES TENSION ON THE OUTSIDE OF THE STRUCTURE

SAMPLE PROBLEM NO. 2 WELDED PL GIRDER BRIDGE 585770PEKR9DES

** GIRDER MOMENTS, SHEARS, AND REACTIONS **

SPAN LENGTH OF NO. 3=137.00 FT
GIRDER WEIGHT= 0.18 KIPS/FT SUPERIMPOSED DEAD LOAD= 0.95 KIPS/FT E(MODULUS)= 29000 KIPS/SQ IN
LIVE LOAD WHEEL FRACTION= 1.68

	DEAD LOAD GIRDER			SUPERIMPOSED DEAD LOAD			POINT LOADING			
POINT	REACTION	SHEAR	MOMENT	REACTION	SHEAR	MOMENT	LOADING	REACTION	SHEAR	MOMENT
3.0R	25.073	12.374	-286.05	130.205	65.075	-1524.49		0.0	0.0	0.0
3.1		9.638	0.0		52.060	0.0			0.0	0.0
3.2		7.229	0.0		39.045	0.0			0.0	0.0
3.3		4.819	0.0		26.030	0.0			0.0	0.0
3.4		2.410	0.0		13.015	0.0			0.0	0.0
3.5		-0.000	131.06		-0.000	704.32			0.0	0.0
3.6		-2.410	0.0		-13.015	0.0			0.0	0.0
3.7		-4.819	0.0		-26.030	0.0			0.0	0.0
3.8		-7.229	0.0		-39.045	0.0			0.0	0.0
3.9		-9.965	0.0		-52.060	0.0			0.0	0.0
4.0L	25.073	-12.374	-286.05	130.205	-65.075	-1524.49		0.0	0.0	0.0

	TRUCK LOAD 1				TRUCK LOAD 2				TRUCK LOAD 3			
POINT	REACTION	SHEAR	+MOMENT	-MOMENT	REACTION	SHEAR	+MOMENT	-MOMENT	REACTION	SHEAR	+MOMENT	-MOMENT
3.0R	71.312	68.330	244.29	-864.08	77.195	69.077	251.16	-889.13	43.766	42.805	150.53	-532.67
3.1		0.0	0.0	0.0		0.0	0.0	0.0		0.0	0.0	0.0
3.2		0.0	0.0	0.0		0.0	0.0	0.0		0.0	0.0	0.0
3.3		0.0	0.0	0.0		0.0	0.0	0.0		0.0	0.0	0.0
3.4		0.0	0.0	0.0		0.0	0.0	0.0		0.0	0.0	0.0
3.5		30.267	1380.2	-305.60		25.902	1263.8	-314.20		20.102	913.7	-188.31
3.6		0.0	0.0	0.0		0.0	0.0	0.0		0.0	0.0	0.0
3.7		0.0	0.0	0.0		0.0	0.0	0.0		0.0	0.0	0.0
3.8		0.0	0.0	0.0		0.0	0.0	0.0		0.0	0.0	0.0
3.9		0.0	0.0	0.0		0.0	0.0	0.0		0.0	0.0	0.0
4.0L	0.0	0.0	0.0	0.0	0.0	0.0	0.0	0.0	0.0	0.0	0.0	0.0

NOTE. -MOMENT IS A MOMENT THAT CAUSES TENSION ON THE OUTSIDE OF THE STRUCTURE

SAMPLE PROBLEM NO. 2 WELDED PL GIRDER BRIDGE 585770PEKR9DES

** GIRDER MOMENTS, SHEARS, AND REACTIONS **

SPAN LENGTH OF NO. 4=137.00 FT
GIRDER WEIGHT= 0.18 KIPS/FT SUPERIMPOSED DEAD LOAD= 0.95 KIPS/FT E(MODULUS)= 29000 KIPS/SQ IN
LIVE LOAD WHEEL FRACTION= 1.68

	DEAD LOAD GIRDER			SUPERIMPOSED DEAD LOAD				POINT LOADING		
POINT	REACTION	SHEAR	MOMENT	REACTION	SHEAR	MOMENT	LOADING	REACTION	SHEAR	MOMENT
4.0R	25.073	12.373	-286.05	130.205	65.130	-1524.49		0.0	0.0	0.0
4.1		9.637	0.0		52.115	0.0			0.0	0.0
4.2		7.228	0.0		39.100	0.0			0.0	0.0
4.3		4.818	0.0		26.085	0.0			0.0	0.0
4.4		2.408	0.0		13.070	0.0			0.0	0.0
4.5		-0.001	0.0		0.055	0.0			0.0	0.0
4.6		-2.411	0.0		-12.960	0.0			0.0	0.0
4.7		-4.820	0.0		-25.975	0.0			0.0	0.0
4.8		-7.230	0.0		-38.990	0.0			0.0	0.0
4.9		-9.966	0.0		-52.005	0.0			0.0	0.0
5.0L	25.390	-12.375	-286.20	131.060	-65.020	-1516.94		0.0	0.0	0.0

	TRUCK LOAD 1				TRUCK LOAD 2				TRUCK LOAD 3			
POINT	REACTION	SHEAR	+MOMENT	-MOMENT	REACTION	SHEAR	+MOMENT	-MOMENT	REACTION	SHEAR	+MOMENT	-MOMENT
4.0R	71.299	68.288	244.29	-864.08	77.179	68.966	251.16	-889.13	43.766	42.790	150.53	-532.67
4.1		0.0	0.0	0.0		0.0	0.0	0.0		0.0	0.0	0.0
4.2		0.0	0.0	0.0		0.0	0.0	0.0		0.0	0.0	0.0
4.3		0.0	0.0	0.0		0.0	0.0	0.0		0.0	0.0	0.0
4.4		0.0	0.0	0.0		0.0	0.0	0.0		0.0	0.0	0.0
4.5		0.0	0.0	0.0		0.0	0.0	0.0		0.0	0.0	0.0
4.6		0.0	0.0	0.0		0.0	0.0	0.0		0.0	0.0	0.0
4.7		0.0	0.0	0.0		0.0	0.0	0.0		0.0	0.0	0.0
4.8		0.0	0.0	0.0		0.0	0.0	0.0		0.0	0.0	0.0
4.9		0.0	0.0	0.0		0.0	0.0	0.0		0.0	0.0	0.0
5.0L	0.0	0.0	0.0	0.0	0.0	0.0	0.0	0.0	0.0	0.0	0.0	0.0

NOTE. -MOMENT IS A MOMENT THAT CAUSES TENSION ON THE OUTSIDE OF THE STRUCTURE

SAMPLE PROBLEM NO. 2 WELDED PL GIRDER BRIDGE 585770PEKR9DES

** GIRDER MOMENTS, SHEARS, AND REACTIONS **

SPAN LENGTH OF NO. 5=110.00 FT
GIRDER WEIGHT= 0.16 KIPS/FT SUPERIMPOSED DEAD LOAD= 0.95 KIPS/FT E(MODULUS)= 29000 KIPS/SQ IN
LIVE LOAD WHEEL FRACTION= 1.68

	DEAD LOAD GIRDER			SUPERIMPOSED DEAD LOAD			POINT LOADING			
POINT	REACTION	SHEAR	MOMENT	REACTION	SHEAR	MOMENT	LOADING	REACTION	SHEAR	MOMENT
5.0R	25.390	12.721	-286.20	131.060	66.040	-1516.94		0.0	0.0	0.0
5.1		10.524	0.0		55.590	0.0			0.0	0.0
5.2		8.327	0.0		45.140	0.0			0.0	0.0
5.3		6.393	0.0		34.690	0.0			0.0	0.0
5.4		4.458	0.0		24.240	0.0			0.0	0.0
5.5		2.523	0.0		13.790	0.0			0.0	0.0
5.6		0.589	0.0		3.340	0.0			0.0	0.0
5.7		-1.346	0.0		-7.110	0.0			0.0	0.0
5.8		-3.281	0.0		-17.560	0.0			0.0	0.0
5.9		-5.216	0.0		-28.010	0.0			0.0	0.0
6.0L	7.150	-7.150	0.00	38.460	-38.460	0.00		0.0	0.0	0.0

	TRUCK LOAD 1				TRUCK LOAD 2				TRUCK LOAD 3			
POINT	REACTION	SHEAR	+MOMENT	-MOMENT	REACTION	SHEAR	+MOMENT	-MOMENT	REACTION	SHEAR	+MOMENT	-MOMENT
5.0R	72.630	69.499	259.12	-901.60	78.601	70.063	266.63	-928.00	44.594	43.593	159.74	-555.94
5.1		0.0	0.0	0.0		0.0	0.0	0.0		0.0	0.0	0.0
5.2		0.0	0.0	0.0		0.0	0.0	0.0		0.0	0.0	0.0
5.3		0.0	0.0	0.0		0.0	0.0	0.0		0.0	0.0	0.0
5.4		0.0	0.0	0.0		0.0	0.0	0.0		0.0	0.0	0.0
5.5		0.0	0.0	0.0		0.0	0.0	0.0		0.0	0.0	0.0
5.6		0.0	0.0	0.0		0.0	0.0	0.0		0.0	0.0	0.0
5.7		0.0	0.0	0.0		0.0	0.0	0.0		0.0	0.0	0.0
5.8		0.0	0.0	0.0		0.0	0.0	0.0		0.0	0.0	0.0
5.9		0.0	0.0	0.0		0.0	0.0	0.0		0.0	0.0	0.0
6.0L	0.0	0.0	0.0	0.0	0.0	0.0	0.0	0.0	0.0	0.0	0.0	0.0

NOTE, -MOMENT IS A MOMENT THAT CAUSES TENSION ON THE OUTSIDE OF THE STRUCTURE

SAMPLE PROBLEM NO. 2 WELDED PL GIRDER BRIDGE 585770PEKR9DES

** MAXIMUM MOMENTS, SHEARS, REACTIONS, & DEFLECTIONS **

SPAN LENGTH OF NO. 1=110.00 FT

GIRDER WEIGHT= 0.18 KIPS/FT SUPERIMPOSED DEAD LOAD= 0.95 KIPS/FT E(MODULUS)= 29000 KIPS/SQ IN

DESIGN VALUES

	1.0R	1.1	1.2	1.3	1.4	1.5	1.6	1.7	1.8	1.9	2.0L
REACTION	45.6										233.6
SHEAR	45.6	33.2	20.8	8.5	27.1	-16.3	-28.7	-41.1	-53.7	-66.4	-78.8
+MOMENTS	0.0	0.0	0.0	0.0	2316.6	0.0	0.0	0.0	0.0	0.0	-1803.1
-MOMENTS	0.0	0.0	0.0	0.0	542.2	0.0	0.0	0.0	0.0	0.0	-1803.1

SPAN LENGTH OF NO. 2=137.00 FT

GIRDER WEIGHT= 0.18 KIPS/FT SUPERIMPOSED DEAD LOAD= 0.95 KIPS/FT E(MODULUS)= 29000 KIPS/SQ IN

DESIGN VALUES

	2.0R	2.1	2.2	2.3	2.4	2.5	2.6	2.7	2.8	2.9	3.0L
REACTION	233.6										232.5
SHEAR	146.6	61.6	46.2	30.8	15.4	30.5	-15.5	-30.9	-46.3	-62.1	-77.5
+MOMENTS	-1541.3	0.0	0.0	0.0	0.0	2210.7	0.0	0.0	0.0	0.0	-1810.5
-MOMENTS	-2731.1	0.0	0.0	0.0	0.0	522.7	0.0	0.0	0.0	0.0	-1810.5

SPAN LENGTH OF NO. 3=137.00 FT

GIRDER WEIGHT= 0.18 KIPS/FT SUPERIMPOSED DEAD LOAD= 0.95 KIPS/FT E(MODULUS)= 29000 KIPS/SQ IN

DESIGN VALUES

	3.0R	3.1	3.2	3.3	3.4	3.5	3.6	3.7	3.8	3.9	4.0L
REACTION	232.5										232.5
SHEAR	146.5	61.7	46.3	30.8	15.4	30.3	-15.4	-30.8	-46.3	-62.0	-77.4
+MOMENTS	-1559.4	0.0	0.0	0.0	0.0	2215.6	0.0	0.0	0.0	0.0	-1810.5
-MOMENTS	-2699.7	0.0	0.0	0.0	0.0	521.2	0.0	0.0	0.0	0.0	-1810.5

SAMPLE PROBLEM NO. 2 WELDED PL GIRDER BRIDGE 585770PEKR9DES

** MAXIMUM MOMENTS, SHEARS, REACTIONS, & DEFLECTIONS **

SPAN LENGTH OF NO. 4=137.00 FT

GIRDER WEIGHT= 0.18 KIPS/FT SUPERIMPOSED DEAD LOAD= 0.95 KIPS/FT E(MODULUS)= 29000 KIPS/SQ IN

DESIGN VALUES

	4.0R	4.1	4.2	4.3	4.4	4.5	4.6	4.7	4.8	4.9	5.0L
REACTION	232.5										235.1
SHEAR	146.5	61.8	46.3	30.9	15.5	0.1	-15.4	-30.8	-46.2	-62.0	-77.4
+MOMENTS	-1559.4	0.0	0.0	0.0	0.0	0.0	0.0	0.0	0.0	0.0	-1803.1
-MOMENTS	-2699.7	0.0	0.0	0.0	0.0	0.0	0.0	0.0	0.0	0.0	-1803.1

SPAN LENGTH OF NO. 5=110.00 FT

GIRDER WEIGHT= 0.18 KIPS/FT SUPERIMPOSED DEAD LOAD= 0.95 KIPS/FT E(MODULUS)= 29000 KIPS/SQ IN

DESIGN VALUES

	5.0R	5.1	5.2	5.3	5.4	5.5	5.6	5.7	5.8	5.9	6.0L
REACTION	235.1										45.6
SHEAR	148.8	66.1	53.5	41.1	28.7	16.3	3.9	-8.5	-20.8	-33.2	-45.6
+MOMENTS	-1536.5	0.0	0.0	0.0	0.0	0.0	0.0	0.0	0.0	0.0	0.0
-MOMENTS	-2731.1	0.0	0.0	0.0	0.0	0.0	0.0	0.0	0.0	0.0	0.0

NOW CALLING 1BRSYS00

SAMPLE PROBLEM NO. 2 WELDED PL GIRDER BRIDGE 585770PEKR9DES

WORK CODE	DATA CODE	ENTRY 1	ENTRY 2	ENTRY 3	ENTRY 4	ENTRY 5	ENTRY 6	
DC	5	11.00000	1.00000	0.0	0.0	0.0	0.0	*****
	501	0.0	0.0	0.0	0.55000	0.0	0.0	0
	502	0.0	0.0	0.0	0.75000	0.0	0.0	0
	510	1.00000	1.00000	2.00000	1.00000	0.0	0.0	0
	530	104.00000	2.00000	36000.00000	0.0	0.0	0.0	1
	531	0.0	48.00000	0.0	0.0	1.00000	0.0	0
	530	200.00000	2.00000	36000.00000	50000.00000	50000.00000	0.0	1
	531	0.0	26.00000	1.25000	6.75000	1.00000	20.50000	0
	530	205.00000	2.00000	36000.00000	0.0	0.0	0.0	1
	531	0.0	48.00000	0.0	0.0	1.00000	0.0	0
	530	300.00000	2.00000	36000.00000	50000.00000	50000.00000	0.0	1
	531	0.0	26.00000	1.25000	6.75000	1.00000	20.50000	0
	530	305.00000	2.00000	36000.00000	0.0	0.0	0.0	1
	531	0.0	48.00000	0.0	0.0	1.00000	0.0	0
	530	400.00000	2.00000	36000.00000	50000.00000	50000.00000	0.0	1
	531	0.0	26.00000	1.25000	6.75000	1.00000	20.50000	0
	530	500.00000	2.00000	36000.00000	50000.00000	50000.00000	0.0	1
	531	0.0	26.00000	1.25000	6.75000	1.00000	20.50000	0

SAMPLE PROBLEM NO. 2 WELDED PL GIRDER BRIDGE 585770PEKR9DES

STRUCTURAL STEEL REVIEW

SPAN 1 @ 4 TENTHS POINT

INPUT SECTION DIMENSIONS

DEPTH OF WEB	87.00	TOP FLANGE THICKNESS	0.88	BOTTOM FLANGE THICKNESS	0.88
THICKNESS OF WEB	0.31	TOP FLANGE WIDTH	14.00	BOTTOM FLANGE WIDTH	14.00

MATERIALS FACTOR

YIELD STRENGTH OF WEB	36000.	YIELD STR. OF TOP FLNG.	36000.	YIELD STR. OF BOT. FLNG.	36000.

APPLIED ACTIONS

	DEAD LOAD	TRUCK # 1 POSITIVE	TRUCK # 1 NEGATIVE	TRUCK # 2 POSITIVE	TRUCK # 2 NEGATIVE	TRUCK # 3 POSITIVE	TRUCK # 3 NEGATIVE
MOMENT Z-Z	916.98	1399.62	-364.19	1272.71	-374.77	921.07	-224.51
SHEAR Y-Z	-3.93	31.05		26.08		20.79	

FIRST LOADING

ALLOWABLE STRESSES

FLEXURE IN WEB	19800.	COMPOSITE CONCRETE	0.
SHEAR IN WEB	11880.	BEARING STIFFENERS	0.

ACTUAL STRESSES

	DESIGN POINTS ONE	TWO	THREE	FOUR	FIVE	SIX	SEVEN
FLEXURE (POS. MOM)	19141.	19141.	18764.	0.	18764.	19141.	19141.
SHEAR-N(HORIZONTAL)	0.	0.	0.	0.	0.	0.	0.
SHEAR-P(HORIZONTAL)	0.	0.	725.	1123.	725.	0.	0.
SHEAR IN WEB (VERTICAL)				998.			

MINIMUM WEB THICKNESS CRITERIA

WITH OUT STIFFENERS	0.580	WITH TRANSVERSE STIFF.	0.250	WITH LONGITUDINAL STIFF.	0.262

STIFFENER DATA

TRANSVERSE STIFFENER-SPACING	87.00	MOMENT OF INERTIA	0.67		
LONGITUDINAL STIFFENER-MOMENT OF INERTIA	1.59	WIDTH	2.97	THICKNESS	0.18

STRUCTURAL STEEL REVIEW

SPAN 1 @ 4 TENTHS POINT (CONTINUED)

SECOND LOADING

ALLOWABLE STRESSES

FLEXURE IN WEB	19800.	COMPOSITE CONCRETE	0.
SHEAR IN WEB	11880.	BEARING STIFFENERS	0.

ACTUAL STRESSES

	DESIGN POINTS						
	ONE	TWO	THREE	FOUR	FIVE	SIX	SEVEN
FLEXURE (POS. MOM)	18092.	18092.	17736.	0.	17736.	18092.	18092.
SHEAR-N(HORIZONTAL)	0.	0.	0.	0.	0.	0.	0.
SHEAR-P(HORIZONTAL)	0.	0.	592.	917.	592.	0.	0.
SHEAR IN WEB (VERTICAL)				815.			

MINIMUM WEB THICKNESS CRITERIA

WITH OUT STIFFENERS 0.580 WITH TRANSVERSE STIFF. 0.226 WITH LONGITUDINAL STIFF. 0.256

STIFFENER DATA

TRANSVERSE STIFFENER-SPACING 87.00 MOMENT OF INERTIA 0.67

LONGITUDINAL STIFFENER-MOMENT OF INERTIA 1.59 WIDTH 2.99 THICKNESS 0.18

SAMPLE PROBLEM NO. 2 WELDED PL GIRDER BRIDGE 585770PEKR9DES

STRUCTURAL STEEL REVIEW

SPAN 1 @ 4 TENTHS POINT (CONTINUED)

THIRD LOADING

ALLOWABLE STRESSES

FLEXURE IN WEB	19800.	COMPOSITE CONCRETE	0.
SHEAR IN WEB	11880.	BEARING STIFFENERS	0.

ACTUAL STRESSES

	DESIGN POINTS						
	ONE	TWO	THREE	FOUR	FIVE	SIX	SEVEN
FLEXURE (POS. MOM)	15187.	15187.	14888.	0.	14888.	15187.	15187.
SHEAR-N(HORIZONTAL)	0.	0.	0.	0.	0.	0.	0.
SHEAR-P(HORIZONTAL)	0.	0.	451.	698.	451.	0.	0.
SHEAR IN WEB (VERTICAL)				620.			

MINIMUM WEB THICKNESS CRITERIA

WITH OUT STIFFENERS 0.580 WITH TRANSVERSE STIFF. 0.197 WITH LONGITUDINAL STIFF. 0.256

STIFFENER DATA

TRANSVERSE STIFFENER-SPACING 87.00 MOMENT OF INERTIA 0.67

LONGITUDINAL STIFFENER-MOMENT OF INERTIA 1.59 WIDTH 3.06 THICKNESS 0.17

SAMPLE PROBLEM NO. 2 WELDED PL GIRDER BRIDGE 585770PEKR9DES

STRUCTURAL STEEL REVIEW

SPAN 2 @ 0 TENTHS POINT

INPUT SECTION DIMENSIONS

DEPTH OF WEB	87.00	TOP FLANGE THICKNESS	1.13	BOTTOM FLANGE THICKNESS	1.13
THICKNESS OF WEB	0.31	TOP FLANGE WIDTH	14.00	BOTTOM FLANGE WIDTH	14.00
BEARING STIFF. WIDTH	6.75	BEARING STIFF. THICKNESS	1.25		

MATERIALS FACTOR

YIELD STRENGTH OF WEB 36000. YIELD STR. OF TOP FLNG. 50000. YIELD STR. OF BOT. FLNG. 50000.

APPLIED ACTIONS

	DEAD LOAD	TRUCK # 1 POSITIVE	TRUCK # 1 NEGATIVE	TRUCK # 2 POSITIVE	TRUCK # 2 NEGATIVE	TRUCK # 3 POSITIVE	TRUCK # 3 NEGATIVE
MOMENT Z-Z	-1803.13	254.43	-901.80	261.81	-928.00	156.85	-555.94
SHEAR Y-Z	77.39	68.42		69.25		42.83	

FIRST LOADING

ALLOWABLE STRESSES

FLEXURE IN WEB	19330.	COMPOSITE CONCRETE	0.
SHEAR IN WEB	11880.	BEARING STIFFENERS	15982.

ACTUAL STRESSES

	DESIGN POINTS ONE	TWO	THREE	FOUR	FIVE	SIX	SEVEN
FLEXURE (NEG. MOM)	0.	18497.	18031.	0.	18031.	18497.	0.
SHEAR-N(HORIZONTAL)	0.	0.	4135.	5897.	4135.	0.	0.
SHEAR-P(HORIZONTAL)	0.	0.	4135.	5897.	4135.	0.	0.
SHEAR IN WEB (VERTICAL)				5363.			
BEARING STIFFENERS	12225.						

MINIMUM WEB THICKNESS CRITERIA

WITH OUT STIFFENERS 0.850 WITH TRANSVERSE STIFF. 0.579 WITH LONGITUDINAL STIFF. 0.260

STIFFENER DATA

TRANSVERSE STIFFENER-SPACING 46.94 MOMENT OF INERTIA 4.79

LONGITUDINAL STIFFENER-MOMENT OF INERTIA 0.22 WIDTH 1.83 THICKNESS 0.11

BEARING STIFFENERS -AREA 8.44 WIDTH 6.50 THICKNESS 1.00

STRUCTURAL STEEL REVIEW

SPAN 2 @ 0 TENTHS POINT (CONTINUED)

SECOND LOADING

ALLOWABLE STRESSES

FLEXURE IN WEB	19330.	COMPOSITE CONCRETE	0.
SHEAR IN WEB	11880.	BEARING STIFFENERS	15982.

ACTUAL STRESSES

	DESIGN POINTS						
	ONE	TWO	THREE	FOUR	FIVE	SIX	SEVEN
FLEXURE (NEG. MOM)	0.	18676.	18205.	0.	18205.	18676.	0.
SHEAR-N(HORIZONTAL)	0.	0.	4159.	5930.	4159.	0.	0.
SHEAR-P(HORIZONTAL)	0.	0.	4159.	5930.	4159.	0.	0.
SHEAR IN WEB (VERTICAL)				5394.			
BEARING STIFFENERS	12539.						

MINIMUM WEB THICKNESS CRITERIA

WITH OUT STIFFENERS 0.852 WITH TRANSVERSE STIFF. 0.581 WITH LONGITUDINAL STIFF. 0.262

STIFFENER DATA

TRANSVERSE STIFFENER-SPACING 46.81 MOMENT OF INERTIA 4.82

LONGITUDINAL STIFFENER-MOMENT OF INERTIA 0.22 WIDTH 1.82 THICKNESS 0.11

BEARING STIFFENERS -AREA 8.44 WIDTH 6.50 THICKNESS 1.00

SAMPLE PROBLEM NO. 2 WELDED PL GIRDER BRIDGE 585770PEKR9DES

STRUCTURAL STEEL REVIEW

SPAN 2 @ 0 TENTHS POINT (CONTINUED)

THIRD LOADING

ALLOWABLE STRESSES

FLEXURE IN WEB	19330.	COMPOSITE CONCRETE	0.
SHEAR IN WEB	11880.	BEARING STIFFENERS	15982.

ACTUAL STRESSES

	DESIGN POINTS						
	ONE	TWO	THREE	FOUR	FIVE	SIX	SEVEN
FLEXURE (NEG. MOM)	0.	16132.	15725.	0.	15725.	16132.	0.
SHEAR-N(HORIZONTAL)	0.	0.	3410.	4862.	3410.	0.	0.
SHEAR-P(HORIZONTAL)	0.	0.	3410.	4862.	3410.	0.	0.
SHEAR IN WEB (VERTICAL)				4422.			
BEARING STIFFENERS	10746.						

MINIMUM WEB THICKNESS CRITERIA

WITH OUT STIFFENERS 0.771 WITH TRANSVERSE STIFF. 0.526 WITH LONGITUDINAL STIFF. 0.256

STIFFENER DATA

TRANSVERSE STIFFENER-SPACING 51.69 MOMENT OF INERTIA 3.69

LONGITUDINAL STIFFENER-MOMENT OF INERTIA 0.22 WIDTH 1.86 THICKNESS 0.10

BEARING STIFFENERS -AREA 8.44 WIDTH 6.50 THICKNESS 0.88

SAMPLE PROBLEM NO. 2 WELDED PL GIRDER BRIDGE 585770PEKR9DES

STRUCTURAL STEEL REVIEW

SPAN 2 @ 5 TENTHS POINT

INPUT SECTION DIMENSIONS

DEPTH OF WEB	87.00	TOP FLANGE THICKNESS	0.88	BOTTOM FLANGE THICKNESS	0.88
THICKNESS OF WEB	0.31	TOP FLANGE WIDTH	14.00	BOTTOM FLANGE WIDTH	14.00

MATERIALS FACTOR

YIELD STRENGTH OF WEB 36000. YIELD STR. OF TOP FLNG. 36000. YIELD STR. OF BOT. FLNG. 36000.

APPLIED ACTIONS

	DEAD LOAD	TRUCK # 1 POSITIVE	TRUCK # 1 NEGATIVE	TRUCK # 2 POSITIVE	TRUCK # 2 NEGATIVE	TRUCK # 3 POSITIVE	TRUCK # 3 NEGATIVE
MOMENT Z-Z	839.08	1371.60	-307.48	1255.44	-316.39	908.21	-189.55
SHEAR Y-Z	-0.05	30.52		26.13		20.27	

FIRST LOADING

ALLOWABLE STRESSES

FLEXURE IN WEB	19800.	COMPOSITE CONCRETE	0.
SHEAR IN WEB	11880.	BEARING STIFFENERS	0.

ACTUAL STRESSES

	DESIGN POINTS ONE	TWO	THREE	FOUR	FIVE	SIX	SEVEN
FLEXURE (POS. MOM)	18266.	18266.	17906.	0.	17906.	18266.	18266.
SHEAR-N(HORIZONTAL)	0.	0.	0.	0.	0.	0.	0.
SHEAR-P(HORIZONTAL)	0.	0.	814.	1262.	814.	0.	0.
SHEAR IN WEB (VERTICAL)				1121.			

MINIMUM WEB THICKNESS CRITERIA

WITH OUT STIFFENERS 0.580 WITH TRANSVERSE STIFF. 0.265 WITH LONGITUDINAL STIFF. 0.256

STIFFENER DATA

TRANSVERSE STIFFENER-SPACING 87.00 MOMENT OF INERTIA 0.67

LONGITUDINAL STIFFENER-MOMENT OF INERTIA 1.59 WIDTH 2.99 THICKNESS 0.18

STRUCTURAL STEEL REVIEW

SPAN 2 @ 5 TENTHS POINT (CONTINUED)

SECOND LOADING

ALLOWABLE STRESSES

FLEXURE IN WEB	19800.	COMPOSITE CONCRETE	0.
SHEAR IN WEB	11880.	BEARING STIFFENERS	0.

ACTUAL STRESSES

	DESIGN POINTS						
	ONE	TWO	THREE	FOUR	FIVE	SIX	SEVEN
FLEXURE (POS. MOM)	17306.	17306.	16965.	0.	16965.	17306.	17306.
SHEAR-N(HORIZONTAL)	0.	0.	0.	0.	0.	0.	0.
SHEAR-P(HORIZONTAL)	0.	0.	697.	1080.	697.	0.	0.
SHEAR IN WEB (VERTICAL)				959.			

MINIMUM WEB THICKNESS CRITERIA

WITH OUT STIFFENERS 0.580 WITH TRANSVERSE STIFF. 0.245 WITH LONGITUDINAL STIFF. 0.256

STIFFENER DATA

TRANSVERSE STIFFENER-SPACING 87.00 MOMENT OF INERTIA 0.67

LONGITUDINAL STIFFENER-MOMENT OF INERTIA 1.59 WIDTH 3.01 THICKNESS 0.18

STRUCTURAL STEEL REVIEW

SPAN 2 @ 5 TENTHS POINT (CONTINUED)

THIRD LOADING

ALLOWABLE STRESSES

FLEXURE.IN WEB	19800.	COMPOSITE CONCRETE	0.
SHEAR IN WEB	11880.	BEARING STIFFENERS	0.

ACTUAL STRESSES

	DESIGN POINTS						
	ONE	TWO	THREE	FOUR	FIVE	SIX	SEVEN
FLEXURE (POS. MOM)	14437.	14437.	14152.	0.	14152.	14437.	14437.
SHEAR-N(HORIZONTAL)	0.	0.	0.	0.	0.	0.	0.
SHEAR-P(HORIZONTAL)	0.	0.	540.	837.	540.	0.	0.
SHEAR IN WEB (VERTICAL)				743.			

MINIMUM WEB THICKNESS CRITERIA

WITH OUT STIFFENERS 0.580 WITH TRANSVERSE STIFF. 0.216 WITH LONGITUDINAL STIFF. 0.256

STIFFENER DATA

TRANSVERSE STIFFENER-SPACING 87.00 MOMENT OF INERTIA 0.67

LONGITUDINAL STIFFENER-MOMENT OF INERTIA 1.59 WIDTH 3.08 THICKNESS 0.16

SAMPLE PROBLEM NO. 2 WELDED PL GIRDER BRIDGE 585770PEKR9DES

STRUCTURAL STEEL REVIEW

SPAN 3 @ 0 TENTHS POINT

INPUT SECTION DIMENSIONS

DEPTH OF WEB	87.00	TOP FLANGE THICKNESS	1.13	BOTTOM FLANGE THICKNESS	1.13
THICKNESS OF WEB	0.31	TOP FLANGE WIDTH	14.00	BOTTOM FLANGE WIDTH	14.00
BEARING STIFF. WIDTH	6.75	BEARING STIFF. THICKNESS	1.25		

MATERIALS FACTOR

YIELD STRENGTH OF WEB 36000. YIELD STR. OF TOP FLNG. 50000. YIELD STR. OF BOT. FLNG. 50000.

APPLIED ACTIONS

	DEAD LOAD	TRUCK # 1 POSITIVE	TRUCK # 1 NEGATIVE	TRUCK # 2 POSITIVE	TRUCK # 2 NEGATIVE	TRUCK # 3 POSITIVE	TRUCK # 3 NEGATIVE
MOMENT Z-Z	-1810.54	244.29	-864.08	251.16	-889.13	150.53	-532.67
SHEAR Y-Z	77.45	68.33		69.08		42.80	

FIRST LOADING

ALLOWABLE STRESSES

FLEXURE IN WEB	19330.	COMPOSITE CONCRETE	0.
SHEAR IN WEB	11880.	BEARING STIFFENERS	15982.

ACTUAL STRESSES

DESIGN POINTS

	ONE	TWO	THREE	FOUR	FIVE	SIX	SEVEN
FLEXURE (NEG. MOM)	0.	18290.	17829.	0.	17829.	18290.	0.
SHEAR-N(HORIZONTAL)	0.	0.	4134.	5895.	4134.	0.	0.
SHEAR-P(HORIZONTAL)	0.	0.	4134.	5895.	4134.	0.	0.
SHEAR IN WEB (VERTICAL)				5362.			
BEARING STIFFENERS	12161.						

MINIMUM WEB THICKNESS CRITERIA

WITH OUT STIFFENERS 0.849 WITH TRANSVERSE STIFF. 0.579 WITH LONGITUDINAL STIFF. 0.259

STIFFENER DATA

TRANSVERSE STIFFENER-SPACING 46.94 MOMENT OF INERTIA 4.79

LONGITUDINAL STIFFENER-MOMENT OF INERTIA 0.22 WIDTH 1.83 THICKNESS 0.11

BEARING STIFFENERS -AREA 8.44 WIDTH 6.50 THICKNESS 1.00

SAMPLE PROBLEM NO. 2 WELDED PL GIRDER BRIDGE 585770PEKR9DES

STRUCTURAL STEEL REVIEW

SPAN 3 @ 0 TENTHS POINT (CONTINUED)

SECOND LOADING

ALLOWABLE STRESSES

FLEXURE.IN WEB	19330.	COMPOSITE CONCRETE	0.
SHEAR IN WEB	11880.	BEARING STIFFENERS	15982.

ACTUAL STRESSES

	DESIGN POINTS						
	ONE	TWO	THREE	FOUR	FIVE	SIX	SEVEN
FLEXURE (NEG. MOM)	0.	18461.	17996.	0.	17996.	18461.	0.
SHEAR-N(HORIZONTAL)	0.	0.	4155.	5926.	4155.	0.	0.
SHEAR-P(HORIZONTAL)	0.	0.	4155.	5926.	4155.	0.	0.
SHEAR IN WEB (VERTICAL)				5389.			
BEARING STIFFENERS	12477.						

MINIMUM WEB THICKNESS CRITERIA

WITH OUT STIFFENERS 0.852 WITH TRANSVERSE STIFF. 0.581 WITH LONGITUDINAL STIFF. 0.260

STIFFENER DATA

TRANSVERSE STIFFENER-SPACING 46.82 MOMENT OF INERTIA 4.82

LONGITUDINAL STIFFENER-MOMENT OF INERTIA 0.22 WIDTH 1.83 THICKNESS 0.11

BEARING STIFFENERS -AREA 8.44 WIDTH 6.50 THICKNESS 1.00

SAMPLE PROBLEM NO. 2 WELDED PL GIRDER BRIDGE 585770PEKR9DES

STRUCTURAL STEEL REVIEW

SPAN 3 @ 0 TENTHS POINT (CONTINUED)

THIRD LOADING

ALLOWABLE STRESSES

FLEXURE IN WEB	19330.	COMPOSITE CONCRETE	0.
SHEAR IN WEB	11880.	BEARING STIFFENERS	15982.

ACTUAL STRESSES

	DESIGN POINTS						
	ONE	TWO	THREE	FOUR	FIVE	SIX	SEVEN
FLEXURE (NEG. MOM)	0.	16023.	15620.	0.	15620.	16023.	0.
SHEAR-N(HORIZONTAL)	0.	0.	3410.	4863.	3410.	0.	0.
SHEAR-P(HORIZONTAL)	0.	0.	3410.	4863.	3410.	0.	0.
SHEAR IN WEB (VERTICAL)				4423.			
BEARING STIFFENERS	10682.						

MINIMUM WEB THICKNESS CRITERIA

WITH OUT STIFFENERS 0.771 WITH TRANSVERSE STIFF. 0.526 WITH LONGITUDINAL STIFF. 0.256

STIFFENER DATA

TRANSVERSE STIFFENER-SPACING 51.69 MOMENT OF INERTIA 3.69

LONGITUDINAL STIFFENER-MOMENT OF INERTIA 0.22 WIDTH 1.86 THICKNESS 0.10

BEARING STIFFENERS -AREA 8.44 WIDTH 6.50 THICKNESS 0.88

SAMPLE PROBLEM NO. 2 WELDED PL GIRDER BRIDGE 585770PEKR9DES

STRUCTURAL STEEL REVIEW

SPAN 3 @ 5 TENTHS POINT

INPUT SECTION DIMENSIONS

DEPTH OF WEB	87.00	TOP FLANGE THICKNESS	0.88	BOTTOM FLANGE THICKNESS	0.88
THICKNESS OF WEB	0.31	TOP FLANGE WIDTH	14.00	BOTTOM FLANGE WIDTH	14.00

MATERIALS FACTOR

YIELD STRENGTH OF WEB 36000. YIELD STR. OF TOP FLNG. 36000. YIELD STR. OF BOT. FLNG. 36000.

APPLIED ACTIONS

	DEAD LOAD	TRUCK # 1 POSITIVE	TRUCK # 1 NEGATIVE	TRUCK # 2 POSITIVE	TRUCK # 2 NEGATIVE	TRUCK # 3 POSITIVE	TRUCK # 3 NEGATIVE
MOMENT Z-Z	835.38	1380.24	-305.60	1263.79	-314.20	913.74	-188.31
SHEAR Y-Z	-0.00	30.27		25.90		20.10	

FIRST LOADING

ALLOWABLE STRESSES

FLEXURE IN WEB	19800.	COMPOSITE CONCRETE	0.
SHEAR IN WEB	11880.	BEARING STIFFENERS	0.

ACTUAL STRESSES

	DESIGN POINTS ONE	TWO	THREE	FOUR	FIVE	SIX	SEVEN
FLEXURE (POS. MOM)	18307.	18307.	17946.	0.	17946.	18307.	18307.
SHEAR-N(HORIZONTAL)	0.	0.	0.	0.	0.	0.	0.
SHEAR-P(HORIZONTAL)	0.	0.	809.	1253.	809.	0.	0.
SHEAR IN WEB (VERTICAL)				1113.			

MINIMUM WEB THICKNESS CRITERIA

WITH OUT STIFFENERS 0.580 WITH TRANSVERSE STIFF. 0.264 WITH LONGITUDINAL STIFF. 0.256

STIFFENER DATA

TRANSVERSE STIFFENER-SPACING 87.00 MOMENT OF INERTIA 0.67

LONGITUDINAL STIFFENER-MOMENT OF INERTIA 1.59 WIDTH 2.99 THICKNESS 0.18

SAMPLE PROBLEM NO. 2 WELDED PL GIRDER BRIDGE 585770PEKR9DES

STRUCTURAL STEEL REVIEW

SPAN 3 @ 5 TENTHS POINT (CONTINUED)

SECOND LOADING

ALLOWABLE STRESSES

FLEXURE.IN WEB	19800.	COMPOSITE CONCRETE	0.
SHEAR IN WEB	11880.	BEARING STIFFENERS	0.

ACTUAL STRESSES

	DESIGN POINTS						
	ONE	TWO	THREE	FOUR	FIVE	SIX	SEVEN
FLEXURE (POS. MOM)	17345.	17345.	17002.	0.	17002.	17345.	17345.
SHEAR-N(HORIZONTAL)	0.	0.	0.	0.	0.	0.	0.
SHEAR-P(HORIZONTAL)	0.	0.	692.	1072.	692.	0.	0.
SHEAR IN WEB (VERTICAL)				953.			

MINIMUM WEB THICKNESS CRITERIA

WITH OUT STIFFENERS 0.580 WITH TRANSVERSE STIFF. 0.244 WITH LONGITUDINAL STIFF. 0.256

STIFFENER DATA

TRANSVERSE STIFFENER-SPACING 87.00 MOMENT OF INERTIA 0.67

LONGITUDINAL STIFFENER-MOMENT OF INERTIA 1.59 WIDTH 3.01 THICKNESS 0.18

SAMPLE PROBLEM NO. 2 WELDED PL GIRDER BRIDGE 585770PEKR9DES

STRUCTURAL STEEL REVIEW

SPAN 3 @ 5 TENTHS POINT (CONTINUED)

THIRD LOADING

ALLOWABLE STRESSES

FLEXURE IN WEB	19800.	COMPOSITE CONCRETE	0.
SHEAR IN WEB	11880.	BEARING STIFFENERS	0.

ACTUAL STRESSES

	DESIGN POINTS						
	ONE	TWO	THREE	FOUR	FIVE	SIX	SEVEN
FLEXURE (POS. MOM)	14452.	14452.	14167.	0.	14167.	14452.	14452.
SHEAR-N(HORIZONTAL)	0.	0.	0.	0.	0.	0.	0.
SHEAR-P(HORIZONTAL)	0.	0.	537.	832.	537.	0.	0.
SHEAR IN WEB (VERTICAL)				739.			

MINIMUM WEB THICKNESS CRITERIA

WITH OUT STIFFENERS 0.560 WITH TRANSVERSE STIFF. 0.215 WITH LONGITUDINAL STIFF. 0.256

STIFFENER DATA

TRANSVERSE STIFFENER-SPACING 87.00 MOMENT OF INERTIA 0.67

LONGITUDINAL STIFFENER-MOMENT OF INERTIA 1.59 WIDTH 3.08 THICKNESS 0.16

SAMPLE PROBLEM NO. 2 WELDED PL GIRDER BRIDGE 585770PEKR9DES

STRUCTURAL STEEL REVIEW

SPAN 4 @ 0 TENTHS POINT

INPUT SECTION DIMENSIONS

DEPTH OF WEB	87.00	TOP FLANGE THICKNESS	1.13	BOTTOM FLANGE THICKNESS	1.13
THICKNESS OF WEB	0.31	TOP FLANGE WIDTH	14.00	BOTTOM FLANGE WIDTH	14.00
BEARING STIFF. WIDTH	6.75	BEARING STIFF. THICKNESS	1.25		

MATERIALS FACTOR

YIELD STRENGTH OF WEB 36000. YIELD STR. OF TOP FLNG. 50000. YIELD STR. OF BOT. FLNG. 50000.

APPLIED ACTIONS

	DEAD LOAD	TRUCK # 1 POSITIVE	TRUCK # 1 NEGATIVE	TRUCK # 2 POSITIVE	TRUCK # 2 NEGATIVE	TRUCK # 3 POSITIVE	TRUCK # 3 NEGATIVE
MOMENT Z-Z	-1810.54	244.29	-864.08	251.16	-889.13	150.53	-532.67
SHEAR Y-Z	77.50	68.29		68.97		42.79	

FIRST LOADING

ALLOWABLE STRESSES

FLEXURE, IN WEB	19330.	COMPOSITE CONCRETE	0.
SHEAR IN WEB	11880.	BEARING STIFFENERS	15982.

ACTUAL STRESSES

	DESIGN POINTS ONE	TWO	THREE	FOUR	FIVE	SIX	SEVEN
FLEXURE (NEG. MOM)	0.	18290.	17829.	0.	17829.	18290.	0.
SHEAR-N(HORIZONTAL)	0.	0.	4134.	5896.	4134.	0.	0.
SHEAR-P(HORIZONTAL)	0.	0.	4134.	5896.	4134.	0.	0.
SHEAR IN WEB (VERTICAL)				5362.			
BEARING STIFFENERS	12160.						

MINIMUM WEB THICKNESS CRITERIA

WITH OUT STIFFENERS 0.849 WITH TRANSVERSE STIFF. 0.579 WITH LONGITUDINAL STIFF. 0.259

STIFFENER DATA

TRANSVERSE STIFFENER-SPACING 46.94 MOMENT OF INERTIA 4.79

LONGITUDINAL STIFFENER-MOMENT OF INERTIA 0.22 WIDTH 1.83 THICKNESS 0.11

BEARING STIFFENERS -AREA 8.44 WIDTH 6.50 THICKNESS 1.00

STRUCTURAL STEEL REVIEW

SPAN 4 @ 0 TENTHS POINT (CONTINUED)

SECOND LOADING

ALLOWABLE STRESSES

FLEXURE IN WEB	19330.	COMPOSITE CONCRETE	0.
SHEAR IN WEB	11880.	BEARING STIFFENERS	15982.

ACTUAL STRESSES

	DESIGN POINTS						
	ONE	TWO	THREE	FOUR	FIVE	SIX	SEVEN
FLEXURE (NEG. MOM)	0.	18461.	17996.	0.	17996.	18461.	0.
SHEAR-N(HORIZONTAL)	0.	0.	4154.	5923.	4154.	0.	0.
SHEAR-P(HORIZONTAL)	0.	0.	4154.	5923.	4154.	0.	0.
SHEAR IN WEB (VERTICAL)				5387.			
BEARING STIFFENERS	12476.						

MINIMUM WEB THICKNESS CRITERIA

WITH OUT STIFFENERS 0.851 WITH TRANSVERSE STIFF. 0.581 WITH LONGITUDINAL STIFF. 0.260

STIFFENER DATA

TRANSVERSE STIFFENER-SPACING 46.83 MOMENT OF INERTIA 4.82

LONGITUDINAL STIFFENER-MOMENT OF INERTIA 0.22 WIDTH 1.83 THICKNESS 0.11

BEARING STIFFENERS -AREA 8.44 WIDTH 6.50 THICKNESS 1.00

SAMPLE PROBLEM NO. 2 WELDED PL GIRDER BRIDGE

585770PEKR9DES

STRUCTURAL STEEL REVIEW

SPAN 4 @ 0 TENTHS POINT (CONTINUED)

THIRD LOADING

ALLOWABLE STRESSES

FLEXURE.IN WEB	19330.	COMPOSITE CONCRETE	0.
SHEAR IN WEB	11880.	BEARING STIFFENERS	15982.

ACTUAL STRESSES

	DESIGN POINTS						
	ONE	TWO	THREE	FOUR	FIVE	SIX	SEVEN
FLEXURE (NEG. MOM)	0.	16023.	15620.	0.	15620.	16023.	0.
SHEAR-N(HORIZONTAL)	0.	0.	3411.	4865.	3411.	0.	0.
SHEAR-P(HORIZONTAL)	0.	0.	3411.	4865.	3411.	0.	0.
SHEAR IN WEB (VERTICAL)				4425.			
BEARING STIFFENERS	10682.						

MINIMUM WEB THICKNESS CRITERIA

WITH OUT STIFFENERS 0.772 WITH TRANSVERSE STIFF. 0.526 WITH LONGITUDINAL STIFF. 0.256

STIFFENER DATA

TRANSVERSE STIFFENER-SPACING 51.68 MOMENT OF INERTIA 3.70

LONGITUDINAL STIFFENER-MOMENT OF INERTIA 0.22 WIDTH 1.86 THICKNESS 0.10

BEARING STIFFENERS -AREA 8.44 WIDTH 6.50 THICKNESS 0.88

SAMPLE PROBLEM NO. 2 WELDED PL GIRDER BRIDGE 585770PEKR9DES

STRUCTURAL STEEL REVIEW

SPAN 5 @ 0 TENTHS POINT

INPUT SECTION DIMENSIONS

DEPTH OF WEB	87.00	TOP FLANGE THICKNESS	1.13	BOTTOM FLANGE THICKNESS	1.1
THICKNESS OF WEB	0.31	TOP FLANGE WIDTH	14.00	BOTTOM FLANGE WIDTH	14.0
BEARING STIFF. WIDTH	6.75	BEARING STIFF. THICKNESS	1.25		

MATERIALS FACTOR

YIELD STRENGTH OF WEB 36000. YIELD STR. OF TOP FLNG. 50000. YIELD STR. OF BOT. FLNG. 5000

APPLIED ACTIONS

	DEAD LOAD	TRUCK # 1 POSITIVE	TRUCK # 1 NEGATIVE	TRUCK # 2 POSITIVE	TRUCK # 2 NEGATIVE	TRUCK # 3 POSITIVE	TRUCK # 3 NEGATIVE
MOMENT Z-Z	-1803.14	259.12	-901.80	266.63	-928.00	159.74	-555.94
SHEAR Y-Z	78.76	69.50		70.06		43.59	

FIRST LOADING

ALLOWABLE STRESSES

FLEXURE IN WEB	19330.	COMPOSITE CONCRETE	0.
SHEAR IN WEB	11880.	BEARING STIFFENERS	15982.

ACTUAL STRESSES

	DESIGN POINTS ONE	TWO	THREE	FOUR	FIVE	SIX	SEVEN
FLEXURE (NEG. MOM)	0.	18497.	18031.	0.	18031.	18497.	0.
SHEAR-N(HORIZONTAL)	0.	0.	4204.	5996.	4204.	0.	0.
SHEAR-P(HORIZONTAL)	0.	0.	4204.	5996.	4204.	0.	0.
SHEAR IN WEB (VERTICAL)				5453.			
BEARING STIFFENERS	12294.						

MINIMUM WEB THICKNESS CRITERIA

WITH OUT STIFFENERS 0.857 WITH TRANSVERSE STIFF. 0.584 WITH LONGITUDINAL STIFF. 0.260

STIFFENER DATA

TRANSVERSE STIFFENER-SPACING 46.55 MOMENT OF INERTIA 4.89

LONGITUDINAL STIFFENER-MOMENT OF INERTIA 0.22 WIDTH 1.83 THICKNESS 0.11

BEARING STIFFENERS -AREA 8.44 WIDTH 6.50 THICKNESS 1.00

SAMPLE PROBLEM NO. 2 WELDED PL GIRDER BRIDGE 585770PEKR9DES

STRUCTURAL STEEL REVIEW

SPAN 5 @ 0 TENTHS POINT (CONTINUED)

SECOND LOADING

ALLOWABLE STRESSES

FLEXURE IN WEB	19330.	COMPOSITE CONCRETE	0.
SHEAR IN WEB	11880.	BEARING STIFFENERS	15982.

ACTUAL STRESSES

	DESIGN POINTS						
	ONE	TWO	THREE	FOUR	FIVE	SIX	SEVEN
FLEXURE (NEG. MOM)	0.	18676.	18205.	0.	18205.	18676.	0.
SHEAR-N(HORIZONTAL)	0.	0.	4220.	6019.	4220.	0.	0.
SHEAR-P(HORIZONTAL)	0.	0.	4220.	6019.	4220.	0.	0.
SHEAR IN WEB (VERTICAL)				5474.			
BEARING STIFFENERS	12615.						

MINIMUM WEB THICKNESS CRITERIA

WITH OUT STIFFENERS 0.858 WITH TRANSVERSE STIFF. 0.585 WITH LONGITUDINAL STIFF. 0.262

STIFFENER DATA

TRANSVERSE STIFFENER-SPACING 46.46 MOMENT OF INERTIA 4.92

LONGITUDINAL STIFFENER-MOMENT OF INERTIA 0.22 WIDTH 1.82 THICKNESS 0.11

BEARING STIFFENERS -AREA 8.44 WIDTH 6.50 THICKNESS 1.00

SAMPLE PROBLEM NO. 2 WELDED PL GIRDER BRIDGE 585770PEKR9DES

STRUCTURAL STEEL REVIEW

SPAN 5 @ 0 TENTHS POINT (CONTINUED)

THIRD LOADING

ALLOWABLE STRESSES

FLEXURE.IN WEB	19330.	COMPOSITE CONCRETE	0.
SHEAR IN WEB	11880.	BEARING STIFFENERS	15982.

ACTUAL STRESSES

	DESIGN POINTS						
	ONE	TWO	THREE	FOUR	FIVE	SIX	SEVEN
FLEXURE (NEG. MOM)	0.	16132.	15725.	0.	15725.	16132.	0.
SHEAR-N(HORIZONTAL)	0.	0.	3470.	4948.	3470.	0.	0.
SHEAR-P(HORIZONTAL)	0.	0.	3470.	4948.	3470.	0.	0.
SHEAR IN WEB (VERTICAL)				4500.			
BEARING STIFFENERS	10790.						

MINIMUM WEB THICKNESS CRITERIA

WITH OUT STIFFENERS 0.778 WITH TRANSVERSE STIFF. 0.531 WITH LONGITUDINAL STIFF. 0.256

STIFFENER DATA

TRANSVERSE STIFFENER-SPACING 51.24 MOMENT OF INERTIA 3.78

LONGITUDINAL STIFFENER-MOMENT OF INERTIA 0.22 WIDTH 1.86 THICKNESS 0.10

BEARING STIFFENERS -AREA 8.44 WIDTH 6.50 THICKNESS 0.88

NOW CALLING 1BRSYS50

SAMPLE PROBLEM NO. 2 WELDED PL GIRDER BRIDGE 585770PEKR9DES

INVENTORY RATING FOR SPAN 1 @ 4 TENTH (LOAD 1)

	TOP FLANGE FLEXURE	VERTICAL SHEAR	HORIZONTAL SHEAR	BEARING STIFFENERS (COMP)	BEARING STIFFENERS (BEARING)	HORIZONTAL SHEAR (COV PLTS)	BOT FLANGE FLEXURE
POS.M.	1.057	*****	9.366	*****	*****	*****	1.057

OPERATING RATING FOR SPAN 1 @ 4 TENTH (LOAD 1)

	TOP FLANGE FLEXURE	VERTICAL SHEAR	HORIZONTAL SHEAR	BEARING STIFFENERS (COMP)	BEARING STIFFENERS (BEARING)	HORIZONTAL SHEAR (COV PLTS)	BOT FLANGE FLEXURE
POS.M.	1.680	*****	*****	*****	*****	*****	1.680

INVENTORY RATING FOR SPAN 1 @ 4 TENTH (LOAD 2)

	TOP FLANGE FLEXURE	VERTICAL SHEAR	HORIZONTAL SHEAR	BEARING STIFFENERS (COMP)	BEARING STIFFENERS (BEARING)	HORIZONTAL SHEAR (COV PLTS)	BOT FLANGE FLEXURE
POS.M.	1.162	*****	*****	*****	*****	*****	1.162

OPERATING RATING FOR SPAN 1 @ 4 TENTH (LOAD 2)

	TOP FLANGE FLEXURE	VERTICAL SHEAR	HORIZONTAL SHEAR	BEARING STIFFENERS (COMP)	BEARING STIFFENERS (BEARING)	HORIZONTAL SHEAR (COV PLTS)	BOT FLANGE FLEXURE
POS.M.	1.847	*****	*****	*****	*****	*****	1.847

INVENTORY RATING FOR SPAN 1 @ 4 TENTH (LOAD 3)

	TOP FLANGE FLEXURE	VERTICAL SHEAR	HORIZONTAL SHEAR	BEARING STIFFENERS (COMP)	BEARING STIFFENERS (BEARING)	HORIZONTAL SHEAR (COV PLTS)	BOT FLANGE FLEXURE
POS.M.	1.606	*****	*****	*****	*****	*****	1.606

OPERATING RATING FOR SPAN 1 @ 4 TENTH (LOAD 3)

	TOP FLANGE FLEXURE	VERTICAL SHEAR	HORIZONTAL SHEAR	BEARING STIFFENERS (COMP)	BEARING STIFFENERS (BEARING)	HORIZONTAL SHEAR (COV PLTS)	BOT FLANGE FLEXURE
POS.M.	2.552	*****	*****	*****	*****	*****	2.552

INVENTORY RATING FOR SPAN 2 @ 0 TENTH (LOAD 1)

	TOP FLANGE FLEXURE	VERTICAL SHEAR	HORIZONTAL SHEAR	BEARING STIFFENERS (COMP)	BEARING STIFFENERS (BEARING)	HORIZONTAL SHEAR (COV PLTS)	BOT FLANGE FLEXURE
POS.M.	*****	3.590	3.162	1.981	3.863	*****	*****
NEG.M.	2.354	3.590	3.162	1.981	3.863	*****	2.354

OPERATING RATING FOR SPAN 2 @ 0 TENTH (LOAD 1)

	TOP FLANGE FLEXURE	VERTICAL SHEAR	HORIZONTAL SHEAR	BEARING STIFFENERS (COMP)	BEARING STIFFENERS (BEARING)	HORIZONTAL SHEAR (COV PLTS)	BOT FLANGE FLEXURE
POS.M.	*****	5.306	4.724	3.500	5.377	*****	*****
NEG.M.	3.937	5.306	4.724	3.500	5.377	*****	3.937

INVENTORY RATING FOR SPAN 2 @ 0 TENTH (LOAD 2)

	TOP FLANGE FLEXURE	VERTICAL SHEAR	HORIZONTAL SHEAR	BEARING STIFFENERS (COMP)	BEARING STIFFENERS (BEARING)	HORIZONTAL SHEAR (COV PLTS)	BOT FLANGE FLEXURE
POS.M.	*****	3.546	3.124	1.831	3.570	*****	*****
NEG.M.	2.288	3.546	3.124	1.831	3.570	*****	2.288

OPERATING RATING FOR SPAN 2 @ 0 TENTH (LOAD 2)

	TOP FLANGE FLEXURE	VERTICAL SHEAR	HORIZONTAL SHEAR	BEARING STIFFENERS (COMP)	BEARING STIFFENERS (BEARING)	HORIZONTAL SHEAR (COV PLTS)	BOT FLANGE FLEXURE
POS.M.	*****	5.242	4.667	3.234	4.970	*****	*****
NEG.M.	3.826	5.242	4.667	3.234	4.970	*****	3.826

INVENTORY RATING FOR SPAN 2 @ 0 TENTH (LOAD 3)

	TOP FLANGE FLEXURE	VERTICAL SHEAR	HORIZONTAL SHEAR	BEARING STIFFENERS (COMP)	BEARING STIFFENERS (BEARING)	HORIZONTAL SHEAR (COV PLTS)	BOT FLANGE FLEXURE
POS.M.	*****	5.734	5.051	3.228	6.293	*****	*****
NEG.M.	3.819	5.734	5.051	3.228	6.293	*****	3.819

OPERATING RATING FOR SPAN 2 @ 0 TENTH (LOAD 3)

	TOP FLANGE FLEXURE	VERTICAL SHEAR	HORIZONTAL SHEAR	BEARING STIFFENERS (COMP)	BEARING STIFFENERS (BEARING)	HORIZONTAL SHEAR (COV PLTS)	BOT FLANGE FLEXURE
POS.M.	*****	8.476	7.545	5.701	8.759	*****	*****
NEG.M.	6.387	8.476	7.545	5.701	8.759	*****	6.387

INVENTORY RATING FOR SPAN 2 @ 5 TENTH (LOAD 1)

	TOP FLANGE FLEXURE	VERTICAL SHEAR	HORIZONTAL SHEAR	BEARING STIFFENERS (COMP)	BEARING STIFFENERS (BEARING)	HORIZONTAL SHEAR (COV PLTS)	BOT FLANGE FLEXURE
POS.M.	1.135	*****	9.401	*****	*****	*****	1.135

OPERATING RATING FOR SPAN 2 @ 5 TENTH (LOAD 1)

	TOP FLANGE FLEXURE	VERTICAL SHEAR	HORIZONTAL SHEAR	BEARING STIFFENERS (COMP)	BEARING STIFFENERS (BEARING)	HORIZONTAL SHEAR (COV PLTS)	BOT FLANGE FLEXURE
POS.M.	1.771	*****	*****	*****	*****	*****	1.771

INVENTORY RATING FOR SPAN 2 @ 5 TENTH (LOAD 2)

	TOP FLANGE FLEXURE	VERTICAL SHEAR	HORIZONTAL SHEAR	BEARING STIFFENERS (COMP)	BEARING STIFFENERS (BEARING)	HORIZONTAL SHEAR (COV PLTS)	BOT FLANGE FLEXURE
POS.M.	1.240	*****	*****	*****	*****	*****	1.240

OPERATING RATING FOR SPAN 2 @ 5 TENTH (LOAD 2)

	TOP FLANGE FLEXURE	VERTICAL SHEAR	HORIZONTAL SHEAR	BEARING STIFFENERS (COMP)	BEARING STIFFENERS (BEARING)	HORIZONTAL SHEAR (COV PLTS)	BOT FLANGE FLEXURE
POS.M.	1.935	*****	*****	*****	*****	*****	1.935

INVENTORY RATING FOR SPAN 2 @ 5 TENTH (LOAD 3)

	TOP FLANGE FLEXURE	VERTICAL SHEAR	HORIZONTAL SHEAR	BEARING STIFFENERS (COMP)	BEARING STIFFENERS (BEARING)	HORIZONTAL SHEAR (COV PLTS)	BOT FLANGE FLEXURE
POS.M.	1.715	*****	*****	*****	*****	*****	1.715

OPERATING RATING FOR SPAN 2 @ 5 TENTH (LOAD 3)

	TOP FLANGE FLEXURE	VERTICAL SHEAR	HORIZONTAL SHEAR	BEARING STIFFENERS (COMP)	BEARING STIFFENERS (BEARING)	HORIZONTAL SHEAR (COV PLTS)	BOT FLANGE FLEXURE
POS.M.	2.674	*****	*****	*****	*****	*****	2.674

INVENTORY RATING FOR SPAN 3 @ 0 TENTH (LOAD 1)

	TOP FLANGE FLEXURE	VERTICAL SHEAR	HORIZONTAL SHEAR	BEARING STIFFENERS (COMP)	BEARING STIFFENERS (BEARING)	HORIZONTAL SHEAR (COV PLTS)	BOT FLANGE FLEXURE

[illegible]	*****	3.593	3.166	1.998	3.880	*****	*****
[illegible]	2.448	3.593	3.166	1.998	3.880	*****	2.448

OPERATING RATING FOR SPAN 3 @ 0 TENTH (LOAD 1)

	TOP FLANGE FLEXURE	VERTICAL SHEAR	HORIZONTAL SHEAR	BEARING STIFFENERS (COMP)	BEARING STIFFENERS (BEARING)	HORIZONTAL SHEAR (COV PLTS)	BOT FLANGE FLEXURE
POS.M.	*****	5.312	4.729	3.517	5.395	*****	*****
NEG.M.	4.101	5.312	4.729	3.517	5.395	*****	4.101

INVENTORY RATING FOR SPAN 3 @ 0 TENTH (LOAD 2)

	TOP FLANGE FLEXURE	VERTICAL SHEAR	HORIZONTAL SHEAR	BEARING STIFFENERS (COMP)	BEARING STIFFENERS (BEARING)	HORIZONTAL SHEAR (COV PLTS)	BOT FLANGE FLEXURE
[illegible]	*****	3.555	3.132	1.846	3.585	*****	*****
[illegible]	2.379	3.555	3.132	1.846	3.585	*****	2.379

OPERATING RATING FOR SPAN 3 @ 0 TENTH (LOAD 2)

	TOP FLANGE FLEXURE	VERTICAL SHEAR	HORIZONTAL SHEAR	BEARING STIFFENERS (COMP)	BEARING STIFFENERS (BEARING)	HORIZONTAL SHEAR (COV PLTS)	BOT FLANGE FLEXURE
POS.M.	*****	5.255	4.678	3.249	4.984	*****	*****
NEG.M.	3.985	5.255	4.678	3.249	4.984	*****	3.985

INVENTORY RATING FOR SPAN 3 @ 0 TENTH (LOAD 3)

	TOP FLANGE FLEXURE	VERTICAL SHEAR	HORIZONTAL SHEAR	BEARING STIFFENERS (COMP)	BEARING STIFFENERS (BEARING)	HORIZONTAL SHEAR (COV PLTS)	BOT FLANGE FLEXURE
[illegible]	*****	5.736	5.054	3.256	6.322	*****	*****
[illegible]	3.972	5.736	5.054	3.256	6.322	*****	3.972

OPERATING RATING FOR SPAN 3 @ 0 TENTH (LOAD 3)

	TOP FLANGE FLEXURE	VERTICAL SHEAR	HORIZONTAL SHEAR	BEARING STIFFENERS (COMP)	BEARING STIFFENERS (BEARING)	HORIZONTAL SHEAR (COV PLTS)	BOT FLANGE FLEXURE
POS.M.	*****	8.480	7.549	5.730	8.790	*****	*****
NEG.M.	6.652	8.480	7.549	5.730	8.790	*****	6.652

SAMPLE PROBLEM NO. 2 WELDED PL GIRDER BRIDGE 585770PEKR9DES

INVENTORY RATING FOR SPAN 3 @ 5 TENTH (LOAD 1)

	TOP FLANGE FLEXURE	VERTICAL SHEAR	HORIZONTAL SHEAR	BEARING STIFFENERS (COMP)	BEARING STIFFENERS (BEARING)	HORIZONTAL SHEAR (COV PLTS)	BOT FLANGE FLEXURE
POS.M.	1.131	*****	9.480	*****	*****	*****	1.131

OPERATING RATING FOR SPAN 3 @ 5 TENTH (LOAD 1)

	TOP FLANGE FLEXURE	VERTICAL SHEAR	HORIZONTAL SHEAR	BEARING STIFFENERS (COMP)	BEARING STIFFENERS (BEARING)	HORIZONTAL SHEAR (COV PLTS)	BOT FLANGE FLEXURE
POS.M.	1.762	*****	*****	*****	*****	*****	1.762

INVENTORY RATING FOR SPAN 3 @ 5 TENTH (LOAD 2)

	TOP FLANGE FLEXURE	VERTICAL SHEAR	HORIZONTAL SHEAR	BEARING STIFFENERS (COMP)	BEARING STIFFENERS (BEARING)	HORIZONTAL SHEAR (COV PLTS)	BOT FLANGE FLEXURE
POS.M.	1.235	*****	*****	*****	*****	*****	1.235

OPERATING RATING FOR SPAN 3 @ 5 TENTH (LOAD 2)

	TOP FLANGE FLEXURE	VERTICAL SHEAR	HORIZONTAL SHEAR	BEARING STIFFENERS (COMP)	BEARING STIFFENERS (BEARING)	HORIZONTAL SHEAR (COV PLTS)	BOT FLANGE FLEXURE
POS.M.	1.925	*****	*****	*****	*****	*****	1.925

INVENTORY RATING FOR SPAN 3 @ 5 TENTH (LOAD 3)

	TOP FLANGE FLEXURE	VERTICAL SHEAR	HORIZONTAL SHEAR	BEARING STIFFENERS (COMP)	BEARING STIFFENERS (BEARING)	HORIZONTAL SHEAR (COV PLTS)	BOT FLANGE FLEXURE
POS.M.	1.708	*****	*****	*****	*****	*****	1.708

OPERATING RATING FOR SPAN 3 @ 5 TENTH (LOAD 3)

	TOP FLANGE FLEXURE	VERTICAL SHEAR	HORIZONTAL SHEAR	BEARING STIFFENERS (COMP)	BEARING STIFFENERS (BEARING)	HORIZONTAL SHEAR (COV PLTS)	BOT FLANGE FLEXURE
POS.M.	2.662	*****	*****	*****	*****	*****	2.662

INVENTORY RATING FOR SPAN 4 @ 0 TENTH (LOAD 1)

	TOP FLANGE FLEXURE	VERTICAL SHEAR	HORIZONTAL SHEAR	BEARING STIFFENERS (COMP)	BEARING STIFFENERS (BEARING)	HORIZONTAL SHEAR (COV PLTS)	BOT FLANGE FLEXURE

POS.M.	*****	3.595	3.167	1.999	3.881	*****	*****
NEG.M.	2.448	3.595	3.167	1.999	3.881	*****	2.448

OPERATING RATING FOR SPAN 4 @ 0 TENTH (LOAD 1)

	TOP FLANGE FLEXURE	VERTICAL SHEAR	HORIZONTAL SHEAR	BEARING STIFFENERS (COMP)	BEARING STIFFENERS (BEARING)	HORIZONTAL SHEAR (COV PLTS)	BOT FLANGE FLEXURE
POS.M.	*****	5.315	4.731	3.518	5.396	*****	*****
NEG.M.	4.101	5.315	4.731	3.518	5.396	*****	4.101

INVENTORY RATING FOR SPAN 4 @ 0 TENTH (LOAD 2)

	TOP FLANGE FLEXURE	VERTICAL SHEAR	HORIZONTAL SHEAR	BEARING STIFFENERS (COMP)	BEARING STIFFENERS (BEARING)	HORIZONTAL SHEAR (COV PLTS)	BOT FLANGE FLEXURE
POS.M.	*****	[illegible].659	3.136	1.847	3.585	*****	*****
NEG.M.	2.379	[illegible].659	3.136	1.847	3.585	*****	2.379

OPERATING RATING FOR SPAN 4 @ 0 TENTH (LOAD 2)

	TOP FLANGE FLEXURE	VERTICAL SHEAR	HORIZONTAL SHEAR	BEARING STIFFENERS (COMP)	BEARING STIFFENERS (BEARING)	HORIZONTAL SHEAR (COV PLTS)	BOT FLANGE FLEXURE
POS.M.	*****	5.262	4.685	3.250	4.985	*****	*****
NEG.M.	3.985	5.262	4.685	3.250	4.985	*****	3.985

INVENTORY RATING FOR SPAN 4 @ 0 TENTH (LOAD 3)

	TOP FLANGE FLEXURE	VERTICAL SHEAR	HORIZONTAL SHEAR	BEARING STIFFENERS (COMP)	BEARING STIFFENERS (BEARING)	HORIZONTAL SHEAR (COV PLTS)	BOT FLANGE FLEXURE
POS.M.	*****	5.737	5.054	3.256	6.322	*****	*****
NEG.M.	3.972	5.737	5.054	3.256	6.322	*****	3.972

OPERATING RATING FOR SPAN 4 @ 0 TENTH (LOAD 3)

	TOP FLANGE FLEXURE	VERTICAL SHEAR	HORIZONTAL SHEAR	BEARING STIFFENERS (COMP)	BEARING STIFFENERS (BEARING)	HORIZONTAL SHEAR (COV PLTS)	BOT FLANGE FLEXURE
POS.M.	*****	8.482	7.550	5.730	8.790	*****	*****
NEG.M.	6.652	8.482	7.550	5.730	8.790	*****	6.652

SAMPLE PROBLEM NO. 2 WELDED PL GIRDER BRIDGE 585770PEKR9DES

INVENTORY RATING FOR SPAN 5 @ 0 TENTH (LOAD 1)

	TOP FLANGE FLEXURE	VERTICAL SHEAR	HORIZONTAL SHEAR	BEARING STIFFENERS (COMP)	BEARING STIFFENERS (BEARING)	HORIZONTAL SHEAR (COV PLTS)	BOT FLANGE FLEXURE
POS.M.	*****	3.514	3.094	1.946	3.794	*****	*****
NEG.M.	2.354	3.514	3.094	1.946	3.794	*****	2.354

OPERATING RATING FOR SPAN 5 @ 0 TENTH (LOAD 1)

	TOP FLANGE FLEXURE	VERTICAL SHEAR	HORIZONTAL SHEAR	BEARING STIFFENERS (COMP)	BEARING STIFFENERS (BEARING)	HORIZONTAL SHEAR (COV PLTS)	BOT FLANGE FLEXURE
POS.M.	*****	5.204	4.631	3.437	5.281	*****	*****
NEG.M.	3.937	5.204	4.631	3.437	5.281	*****	3.937

INVENTORY RATING FOR SPAN 5 @ 0 TENTH (LOAD 2)

	TOP FLANGE FLEXURE	VERTICAL SHEAR	HORIZONTAL SHEAR	BEARING STIFFENERS (COMP)	BEARING STIFFENERS (BEARING)	HORIZONTAL SHEAR (COV PLTS)	BOT FLANGE FLEXURE
POS.M.	*****	3.486	3.069	1.798	3.506	*****	*****
NEG.M.	2.288	3.486	3.069	1.798	3.506	*****	2.288

OPERATING RATING FOR SPAN 5 @ 0 TENTH (LOAD 2)

	TOP FLANGE FLEXURE	VERTICAL SHEAR	HORIZONTAL SHEAR	BEARING STIFFENERS (COMP)	BEARING STIFFENERS (BEARING)	HORIZONTAL SHEAR (COV PLTS)	BOT FLANGE FLEXURE
POS.M.	*****	5.162	4.593	3.176	4.880	*****	*****
NEG.M.	3.826	5.162	4.593	3.176	4.880	*****	3.826

INVENTORY RATING FOR SPAN 5 @ 0 TENTH (LOAD 3)

	TOP FLANGE FLEXURE	VERTICAL SHEAR	HORIZONTAL SHEAR	BEARING STIFFENERS (COMP)	BEARING STIFFENERS (BEARING)	HORIZONTAL SHEAR (COV PLTS)	BOT FLANGE FLEXURE
POS.M.	*****	5.602	4.932	3.169	6.179	*****	*****
NEG.M.	3.819	5.602	4.932	3.169	6.179	*****	3.819

OPERATING RATING FOR SPAN 5 @ 0 TENTH (LOAD 3)

	TOP FLANGE FLEXURE	VERTICAL SHEAR	HORIZONTAL SHEAR	BEARING STIFFENERS (COMP)	BEARING STIFFENERS (BEARING)	HORIZONTAL SHEAR (COV PLTS)	BOT FLANGE FLEXURE
POS.M.	*****	8.297	7.383	5.598	8.601	*****	*****
NEG.M.	6.387	8.297	7.383	5.598	8.601	*****	6.387

INVENTORY RATING FOR CONCRETE DECK (LOAD 1)

	POSITIVE STEEL	NEGATIVE STEEL	CONCRETE FLEXURE	STIRRUPS
POS M.	1.329	********	1.268	********
NEG M.	1.420	********	1.147	********

OPERATING RATING FOR CONCRETE DECK (LOAD 1)

	POSITIVE STEEL	NEGATIVE STEEL	CONCRETE FLEXURE	STIRRUPS
POS M.	1.875	********	1.791	********
NEG M.	2.001	********	1.625	********

INVENTORY RATING FOR CONCRETE DECK (LOAD 2)

	POSITIVE STEEL	NEGATIVE STEEL	CONCRETE FLEXURE	STIRRUPS
POS M.	2.362	********	2.253	********
NEG M.	2.525	********	2.040	********

OPERATING RATING FOR CONCRETE DECK (LOAD 2)

	POSITIVE STEEL	NEGATIVE STEEL	CONCRETE FLEXURE	STIRRUPS
POS M.	3.333	********	3.183	********
NEG M.	3.557	********	2.889	********

INVENTORY RATING FOR CONCRETE DECK (LOAD 3)

	POSITIVE STEEL	NEGATIVE STEEL	CONCRETE FLEXURE	STIRRUPS
POS M.	2.362	********	2.253	********
NEG M.	2.525	********	2.040	********

OPERATING RATING FOR CONCRETE DECK (LOAD 3)

	POSITIVE STEEL	NEGATIVE STEEL	CONCRETE FLEXURE	STIRRUPS
POS M.	3.333	********	3.183	********
NEG M.	3.557	********	2.889	********

SAMPLE PROBLEM NO. 2 WELDED PL GIRDER BRIDGE

585770PEKR9DES

LOAD RATING SUMMARY SHEET

INVENTORY RATING

CONTROL POINT--SPAN 1 @ 4 TENTH (LOAD 1)

STEEL SECTION : (TOP FLANGE FLEXURE)
POSITIVE MOMENT RATING FACTOR = 1.057
LOAD RATING = 36.994 TONS

CONTROL POINT--SPAN 1 @ 4 TENTH (LOAD 2)

STEEL SECTION : (TOP FLANGE FLEXURE)
POSITIVE MOMENT RATING FACTOR = 1.162
LOAD RATING = 46.437 TONS

CONTROL POINT--SPAN 1 @ 4 TENTH (LOAD 3)

STEEL SECTION : (TOP FLANGE FLEXURE)
POSITIVE MOMENT RATING FACTOR = 1.606
LOAD RATING = 35.335 TONS

SAMPLE PROBLEM NO. 2 WELDED PL GIRDER BRIDGE

585770PEKR9DES

LOAD RATING SUMMARY SHEET

OPERATING RATING

CONTROL POINT--SPAN 0 @ 0 TENTH (LOAD 1)

CONCRETE SECTION : (POSITIVE STEEL)
POSITIVE MOMENT RATING FACTOR = 0.251
LOAD RATING = 8.784 TONS

CONTROL POINT--SPAN 0 @ 0 TENTH (LOAD 2)

CONCRETE SECTION : (POSITIVE STEEL)
POSITIVE MOMENT RATING FACTOR = 0.251
LOAD RATING = 10.027 TONS

CONTROL POINT--SPAN 0 @ 0 TENTH (LOAD 3)

CONCRETE SECTION : (POSITIVE STEEL)
POSITIVE MOMENT RATING FACTOR = 0.251
LOAD RATING = 5.522 TONS

TOTAL WEIGHT OF LOAD TYPE 1 = 35.000 TONS
TOTAL WEIGHT OF LOAD TYPE 2 = 39.950 TONS
TOTAL WEIGHT OF LOAD TYPE 3 = 22.000 TONS

0
NOW CALLING 1BRSYS00

4.5 TREATED TIMBER BRIDGE

Sample Problem #3 is the rating of a 23 foot simple span treated timber bridge with a 2" x 4" laminated floor. The stringers are 20 inches deep, 6 inches wide, and spaced at 2'-2" c-c. The rating truck is an H-15 for which the bridge was originally designed. Since it is a simple span, the truck is routed up mileposts only. In this sample problem, the Load Rating Summary Sheet data concerning truck weights is valid because the deck was run with the stringers.

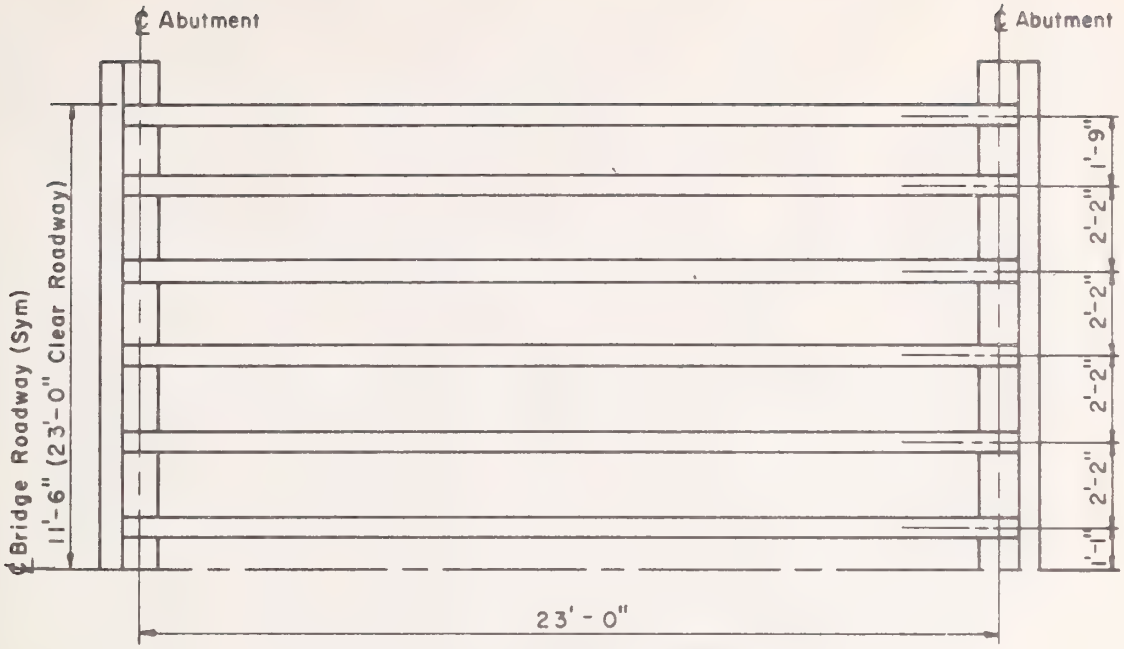

HALF STRINGER PLAN

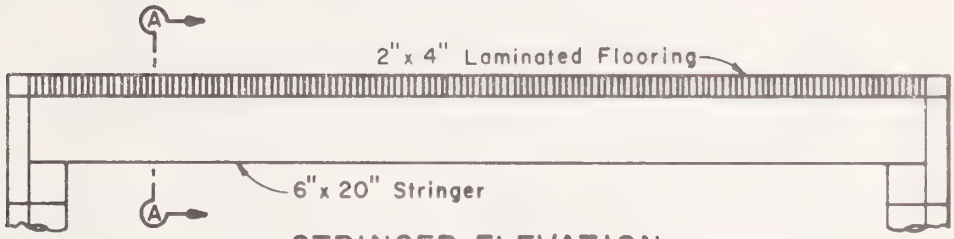

STRINGER ELEVATION

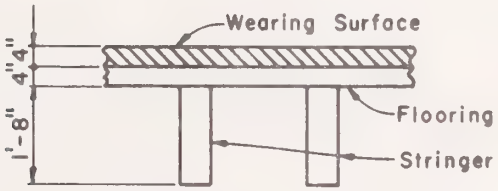

SECTION A-A

SAMPLE PROBLEM NO. 3 - TREATED TIMBER BRIDGE

FORM C-16
Rev. 3/11/69

WYOMING STATE HIGHWAY DEPARTMENT
CHEYENNE WYOMING
BRIDGE DIVISION

SHEET NO. 1 OF 2
BY DAG DATE 9-25-73
CHECKED

//EXEC BRSYSØØ

DESIGN SYSTEM

Employee No. 68	Dept. Code	P or D	Job Code 75	Work Code	Str. No.
743Ø	7Ø	P	EKR9	DES	

I COMMENT CARD

1ØØ	SAMPLE PROBLEM NO. 3 TREATED TIMBER BRIDGE

WORK CODE (1-2)	DATA CODE (3-5)	ENTRY 1 (6-15)	ENTRY 2 (25)	ENTRY 3 (35)	ENTRY 4 (45)	ENTRY 5 (55)	ENTRY 6 (65)	CONT (66)
DC	ØØ6	11.				1.		
	Ø13				12.			
	Ø22	2.17	2.	4.	5Ø.	47.5	6.	
	Ø23	2394.	16Ø.	18ØØ.	12Ø.	1.	2.	
	Ø24		15.					
DC	ØØ1	11111.	1.	1.				
	1Ø1	1.	23.	23.		1.	2Ø.	
	1Ø2	2Ø.						
	1Ø3	23.	1.					
	111	1.	6.					
DC	ØØ2	111Ø.	.5425		15.			
	2Ø1	.139	.Ø5	176Ø.				
	3Ø1	21.	3.	14.	12.			

TRAILER CARD

999

NOTE: A trailer card must follow the last structure card containing data

FORM C-16
Rev. 3/11/69

WYOMING STATE HIGHWAY DEPARTMENT
CHEYENNE WYOMING
BRIDGE DIVISION

SHEET NO. 2 OF 2
BY DAG DATE 9-25-73
CHECKED

//EXEC BRSYSØØ

DESIGN SYSTEM

Employee No. 68	Dept. Code	P or Job D / Code 75	Work Code	Str. No.
743Ø7Ø		PEKR9	DES	

1 COMMENT CARD

1 2 WORK CODE	3 5 DATA CODE	ENTRY 1 (6–15)	ENTRY 2 (25)	ENTRY 3 (35)	ENTRY 4 (45)	ENTRY 5 (55)	ENTRY 6 (65)	66 CONT
DC	ØØ5	11.	1.					
	5Ø1					1.		
	5Ø2					1.33		
	51Ø	1.	7.					
	52Ø	1ØØ.	1Ø2.	1Ø5.				
	59Ø	1ØØ.	18ØØ.	3ØØ.	415.			
	591	12.		6.				
	59Ø	1Ø2.	18ØØ.	12Ø.	415.			
	59Ø	1Ø5.	18ØØ.	12Ø.	415.			

TRAILER CARD

1 3
999

NOTE: A trailer card must follow the last structure card containing data

WYOMING HIGHWAY DEPARTMENT
BRIDGE DESIGN DIVISION

DATE
PAGE NO 1

SAMPLE PROBLEM NO. 3 TREATED TIMBER BRIDGE

743070PEKR9DES

INPUT AS RECEIVED BY COMPUTER

WORK CODE	DATA CODE	ENTRY 1	ENTRY 2	ENTRY 3	ENTRY 4	ENTRY 5	ENTRY 6
DC	6	11.00000	0.0	0.0	0.0	1.00000	0.0
	13	0.0	0.0	0.0	12.00000	0.0	0.0
	22	2.17000	2.00000	4.00000	50.00000	47.50000	6.00000
	23	2394.00000	160.00000	1800.00000	120.00000	1.00000	2.00000
	24	0.0	15.00000	0.0	0.0	0.0	0.0
DC	1	11111.00000	1.00000	1.00000	0.0	0.0	0.0

```
                    WYOMING HIGHWAY DEPARTMENT                          DATE
                      BRIDGE DESIGN DIVISION                            PAGE NO   2

        SAMPLE PROBLEM NO. 3  TREATED TIMBER BRIDGE                743070PEKR9DES

                    STRESSES, MOMENTS, AND LOAD FACTORS FOR TIMBER DECK

   ALLOWABLE BENDING STRESS FOR INVENTORY RATING=   1800. PSI
   ALLOWABLE BENDING STRESS FOR OPERATING RATING=   2394. PSI
   ALLOWABLE HORIZONTAL SHEAR STRESS FOR INVENTORY RATING=    120. PSI
   ALLOWABLE HORIZONTAL SHEAR STRESS FOR OPERATING RATING=    160. PSI

   WHEEL LOAD NUMBER 1 (  12.00KIPS)

      DEAD LOAD MOMENT=      23.7 IN-LBS                LIVE LOAD MOMENT=   2486.4 IN-LBS
      DEAD LOAD BENDING STRESS=      0. PSI             LIVE LOAD BENDING STRESS=    932. PSI
      DEAD LOAD HORIZONTAL SHEAR STRESS=      1. PSI    LIVE LOAD HORIZONTAL SHEAR STRESS=    127. PSI

      INVENTORY RATING USING BENDING STRESSES= 1.921    INVENTORY RATING USING SHEAR STRESSES= 0.935
      OPERATING RATING USING BENDING STRESSES= 2.558    OPERATING RATING USING SHEAR STRESSES= 1.249
NOW CALLING     1RRSYS00
```

WYOMING HIGHWAY DEPARTMENT
BRIDGE DESIGN DIVISION

DATE
PAGE NO. 3

SAMPLE PROBLEM NO. 3 TREATED TIMBER BRIDGE 743070PEKR9DES

INPUT AS RECEIVED BY COMPUTER

WORK CODE	DATA CODE	ENTRY 1	ENTRY 2	ENTRY 3	ENTRY 4	ENTRY 5	ENTRY 6
DC	1	11111.00000	1.00000	1.00000	0.0	0.0	0.0
	101	1.00000	23.00000	23.00000	0.0	1.00000	20.00000
	102	20.00000	0.0	0.0	0.0	0.0	0.0
	103	23.00000	1.00000	0.0	0.0	0.0	0.0
	111	1.00000	6.00000	0.0	0.0	0.0	0.0

SAMPLE PROBLEM NO. 3 TREATED TIMBER BRIDGE 743070PEKRODES

BEAM PROPERTIES STRAGHT LINE DEPTH VARIATION.

SPAN NO. 1 SPAN LENGTH = 23.000 SPAN RATIO = 1.000

POINT	BEAM DEPTH	XSECT AREA	MOMENTS OF INERTIA	DIST TO CENT(X)	WIDTH OF WEB	FLANGE THICKNESS TOP	FLANGE THICKNESS BOT	FLANGE WIDTH TOP	FLANGE WIDTH BOT
1.00	20.00	120.0	4000.	10.0	6.000	0.0	0.0	0.0	0.0
1.05	20.00	120.0	4000.	10.0	6.000	0.0	0.0	0.0	0.0
1.10	20.00	120.0	4000.	10.0	6.000	0.0	0.0	0.0	0.0
1.15	20.00	120.0	4000.	10.0	6.000	0.0	0.0	0.0	0.0
1.20	20.00	120.0	4000.	10.0	6.000	0.0	0.0	0.0	0.0
1.25	20.00	120.0	4000.	10.0	6.000	0.0	0.0	0.0	0.0
1.30	20.00	120.0	4000.	10.0	6.000	0.0	0.0	0.0	0.0
1.35	20.00	120.0	4000.	10.0	6.000	0.0	0.0	0.0	0.0
1.40	20.00	120.0	4000.	10.0	6.000	0.0	0.0	0.0	0.0
1.45	20.00	120.0	4000.	10.0	6.000	0.0	0.0	0.0	0.0
1.50	20.00	120.0	4000.	10.0	6.000	0.0	0.0	0.0	0.0
1.55	20.00	120.0	4000.	10.0	6.000	0.0	0.0	0.0	0.0
1.60	20.00	120.0	4000.	10.0	6.000	0.0	0.0	0.0	0.0
1.65	20.00	120.0	4000.	10.0	6.000	0.0	0.0	0.0	0.0
1.70	20.00	120.0	4000.	10.0	6.000	0.0	0.0	0.0	0.0
1.75	20.00	120.0	4000.	10.0	6.000	0.0	0.0	0.0	0.0
1.80	20.00	120.0	4000.	10.0	6.000	0.0	0.0	0.0	0.0
1.85	20.00	120.0	4000.	10.0	6.000	0.0	0.0	0.0	0.0
1.90	20.00	120.0	4000.	10.0	6.000	0.0	0.0	0.0	0.0
1.95	20.00	120.0	4000.	10.0	6.000	0.0	0.0	0.0	0.0
2.00	20.00	120.0	4000.	10.0	6.000	0.0	0.0	0.0	0.0

	FIXED END MOMENTS FAC	FCA
1.10	-0.0810	0.0090
1.20	-0.1280	0.0320
1.30	-0.1470	0.0630
1.40	-0.1440	0.0960
1.50	-0.1250	0.1250
1.60	-0.0960	0.1440
1.70	-0.0630	0.1470
1.80	-0.0320	0.1280
1.90	-0.0090	0.0810

STIFFNESS KAC= 4.0000 KCA= 4.0000

CARRY OVERS CAC= 0.5000 CCA= 0.5000

SAMPLE PROBLEM NO. 3 TREATED TIMBER BRIDGE 743070PEKR9DES

STIFFNESS AND CARRYOVER FACTORS AS USED IN MATRIX INVERSION

SPAN NO.	STIFFNESS	CARRYOVERS	STIFFNESS
1	KAC=0.400001E 01	CAC=0.500002E 00	KCA=0.400002E 01
2	KCE=0.100000E-09	CCE=0.100000E 01	KEC=0.100000E-09
3	KEG=0.100000E-09	CEG=0.100000E 01	KGE=0.100000E-09
4	KGI=0.100000E-09	CGI=0.100000E 01	KIG=0.100000E-09
5	KIK=0.100000E-09	CIK=0.100000E 01	KKI=0.100000E-09
6	KKM=0.100000E-09	CKM=0.100000E 01	KMK=0.100000E-09
7	KAB=0.100000E-09	CAB=0.100000E 01	KBA=0.100000E-09
8	KCD=0.100000E-09	CCD=0.100000E 01	KDC=0.100000E-09
9	KEF=0.100000E-09	CEF=0.100000E 01	KFE=0.100000E-09
10	KGH=0.100000E-09	CGH=0.100000E 01	KHG=0.100000E-09
11	KIJ=0.100000E-09	CIJ=0.100000E 01	KJI=0.100000E-09
12	KKL=0.100000E-09	CKL=0.100000E 01	KLK=0.100000E-09
13	KMN=0.100000E-09	CMN=0.100000E 01	KNM=0.100000E-09
14	KBD=0.100000E-09	CBD=0.100000E 01	KDB=0.100000E-09
[illegible]	KDF=0.100000E-09	CDF=0.100000E 01	KFD=0.100000E-09
16	KFH=0.100000E-09	CFH=0.100000E 01	KHF=0.100000E-09
17	KHJ=0.100000E-09	CHJ=0.100000E 01	KJH=0.100000E-09
18	KJL=0.100000E-09	CJL=0.100000E 01	KLJ=0.100000E-09
19	KLN=0.100000E-09	CLN=0.100000E 01	KNL=0.100000E-09

SAMPLE PROBLEM NO. 3 TREATED TIMBER BRIDGE 743070PEKR3DES

2 4 1CT

CELL 8 ANALYSIS

MCA=+ 0.0	FCA+ 0.0	FEC+ 0.0	FGE+ 0.0	FIG+ 0.0	FKI+ 0.0	FCA+ 0.0	FCE+ 0.0	FEG+ 0.0	FGI+
+ 0.0	FIK+ 0.0	FKM+ 0.0	FMK+ 0.0	0.0	0.0	0.0	0.0	0.0	
MEC=+ 0.0	FCA+ 0.0	FEC+ 0.0	FGE+ 0.0	FIG+ 0.0	FKI+ 0.0	FCA+ 0.0	FCE+ 0.0	FEG+ 0.0	FGI+
+ 0.0	FIK+ 0.0	FKM+ 0.0	FMK+ 0.0	0.0	0.0	0.0	0.0	0.0	
MGE=+ 0.0	FCA+ 0.0	FEC+ 0.0	FGE+ 0.0	FIG+ 0.0	FKI+ 0.0	FCA+ 0.0	FCE+ 0.0	FEG+ 0.0	FGI+
+ 0.0	FIK+ 0.0	FKM+ 0.0	FMK+ 0.0	0.0	0.0	0.0	0.0	0.0	
MIG=+ 0.0	FCA+ 0.0	FEC+ 0.0	FGE+ 0.0	FIG+ 0.0	FKI+ 0.0	FCA+ 0.0	FCE+ 0.0	FEG+ 0.0	FGI+
+ 0.0	FIK+ 0.0	FKM+ 0.0	FMK+ 0.0	0.0	0.0	0.0	0.0	0.0	
MKI=+ 0.0	FCA+ 0.0	FEC+ 0.0	FGE+ 0.0	FIG+ 0.0	FKI+ 0.0	FCA+ 0.0	FCE+ 0.0	FEG+ 0.0	FGI+
+ 0.0	FIK+ 0.0	FKM+ 0.0	FMK+ 0.0	0.0	0.0	0.0	0.0	0.0	

SAMPLE PROBLEM NO. 3 TREATED TIMBER BRIDGE 743070PEKR9DES

2 4 1CT

CELL 9 ANALYSIS

15--

WYOMING HIGHWAY DEPARTMENT
BRIDGE DESIGN DIVISION

DATE
PAGE NO. 8

SAMPLE PROBLEM NO. 3 TREATED TIMBER BRIDGE

743070PEKR9DES

INFLUENCE LINES

LOAD POINTS	V 1.0R	M 1.0R	M 1.1	M 1.2	M 1.3	M 1.4	M 1.5
1.1	0.900000	0.0	0.090000	0.080000	0.070000	0.060000	0.050000
1.2	0.800000	0.0	0.080000	0.160000	0.140000	0.120000	0.100000
1.3	0.700000	0.0	0.070000	0.140000	0.210000	0.180000	0.150000
1.4	0.600000	0.0	0.060000	0.120000	0.180000	0.240000	0.200000
1.5	0.500000	0.0	0.050000	0.100000	0.150000	0.200000	0.250000
1.6	0.400000	0.0	0.040000	0.080000	0.120000	0.160000	0.200000
1.7	0.300000	0.0	0.030000	0.060000	0.090000	0.120000	0.150000
1.8	0.200000	0.0	0.020000	0.040000	0.060000	0.080000	0.100000
1.9	0.100000	0.0	0.010000	0.020000	0.030000	0.040000	0.050000
AREA 1=	0.500000	0.0	0.045000	0.080000	0.105000	0.120000	0.125000
SUM - =	0.0	0.0	0.0	0.0	0.0	0.0	0.0
SUM + =	0.500000	0.0	0.045000	0.080000	0.105000	0.120000	0.125000
SUM TOT	0.500000	0.0	0.045000	0.080000	0.105000	0.120000	0.125000

WYOMING HIGHWAY DEPARTMENT
- BRIDGE DESIGN DIVISION

DATE
PAGE NO. 9

SAMPLE PROBLEM NO. 3 TREATED TIMBER BRIDGE 743070PEKR9DES

INFLUENCE LINES

LOAD POINTS	M 1.6	M 1.7	M 1.8	M 1.9	M 2.0L	V 2.0L	R 2.0
1.1	0.040000	0.030000	0.020000	0.010000	0.0	-0.100000	0.100000
1.2	0.080000	0.060000	0.040000	0.020000	0.0	-0.200000	0.200000
1.3	0.120000	0.090000	0.060000	0.030000	0.0	-0.300000	0.300000
1.4	0.160000	0.120000	0.080000	0.040000	0.0	-0.400000	0.400000
1.5	0.200000	0.150000	0.100000	0.050000	0.0	-0.500000	0.500000
1.6	0.240000	0.180000	0.120000	0.060000	0.0	-0.600000	0.600000
1.7	0.180000	0.210000	0.140000	0.070000	0.0	-0.700000	0.700000
1.8	0.120000	0.140000	0.160000	0.080000	0.0	-0.800000	0.800000
1.9	0.060000	0.070000	0.080000	0.090000	0.0	-0.900000	0.900000
AREA 1=	0.120000	0.105000	0.080000	0.045000	0.0	-0.500000	0.500000
SUM - =	0.0	0.0	0.0	0.0	0.0	-0.500000	0.500000
SUM + =	0.120000	0.105000	0.080000	0.045000	0.0	0.0	0.0
SUM TOT	0.120000	0.105000	0.080000	0.045000	0.0	-0.500000	0.500000

15-

WYOMING HIGHWAY DEPARTMENT
BRIDGE DIVISION
TENTH POINT SHEARS INFLUENCE LINES

DATE
PAGE NO. 9

SAMPLE PROBLEM NO. 3 TREATED TIMBER BRIDGE 743070PEKR9DES

LOAD POINT	V 1.1	V 1.2	V 1.3	V 1.4	V 1.5	V 1.6	V 1.7	V 1.8	V 1.9
1.0	0.0	0.0	0.0	0.0	0.0	0.0	0.0	0.0	0.0
1.1	0.80000	-0.10000	-0.10000	-0.10000	-0.10000	-0.10000	-0.10000	-0.10000	-0.10000
1.2	0.80000	0.80000	-0.20000	-0.20000	-0.20000	-0.20000	-0.20000	-0.20000	-0.20000
1.3	0.70000	0.70000	0.70000	-0.30000	-0.30000	-0.30000	-0.30000	-0.30000	-0.30000
1.4	0.60000	0.60000	0.60000	0.60000	-0.40000	-0.40000	-0.40000	-0.40000	-0.40000
1.5	0.50000	0.50000	0.50000	0.50000	0.50000	-0.50000	-0.50000	-0.50000	-0.50000
1.6	0.40000	0.40000	0.40000	0.40000	0.40000	-0.60000	-0.60000	-0.60000	-0.60000
1.7	0.30000	0.30000	0.30000	0.30000	0.30000	0.30000	-0.70000	-0.70000	-0.70000
1.8	0.20000	0.20000	0.20000	0.20000	0.20000	0.20000	0.20000	-0.80000	-0.80000
1.9	0.10000	0.10000	0.10000	0.10000	0.10000	0.10000	0.10000	0.10000	-0.90000
AREA 1=	0.40000	0.30000	0.20000	0.10000	0.00000	-0.10000	-0.20000	-0.30000	-0.40000
1ST AREA=	-0.00500	-0.02000	-0.04500	-0.08000	-0.12500	-0.18000	-0.24500	-0.32000	-0.40500
SUM -	-0.00500	-0.02000	-0.04500	-0.08000	-0.12500	-0.18000	-0.24500	-0.32000	-0.40500
SUM +	0.40500	0.32000	0.24500	0.18000	0.12500	0.08000	0.04500	0.02000	0.00500
SUM T	0.40000	0.30000	0.20000	0.10000	0.00000	-0.10000	-0.20000	-0.30000	-0.40000

SAMPLE PROBLEM NO. 3 TREATED TIMBER BRIDGE 743070PEKR9DES

INPUT AS RECEIVED BY COMPUTER

WORK CODE	DATA CODE	ENTRY 1	ENTRY 2	ENTRY 3	ENTRY 4	ENTRY 5	ENTRY 6
DC	2	1110.00000	0.54250	0.0	15.00000	0.0	0.0
	201	0.13900	0.05000	1760.00000	0.0	0.0	0.0
	301	21.00000	3.00000	14.00000	12.00000	0.0	0.0
DC	5	11.00000	1.00000	0.0	0.0	0.0	0.0

NOW CALLING 18RSYS21 21-

NOW CALLING 18RSYS31 31-

NOW CALLING 18RSYS24 24-

NOW CALLING 18RSYS22 22-

SAMPLE PROBLEM NO. 3 TREATED TIMBER BRIDGE 743070PEKR9DES

** GIRDER MOMENTS, SHEARS, AND REACTIONS **

SPAN LENGTH OF NO. 1= 23.00 FT

GIRDER WEIGHT= 0.04 KIPS/FT SUPERIMPOSED DEAD LOAD= 0.14 KIPS/FT E(MODULUS)= 1760 KIPS/SQ IN

LIVE LOAD WHEEL FRACTION= 0.54

	DEAD LOAD GIRDER			SUPERIMPOSED DEAD LOAD				POINT LOADING		
POINT	REACTION	SHEAR	MOMENT	REACTION	SHEAR	MOMENT	LOADING	REACTION	SHEAR	MOMENT
1.0R	0.479	0.479	0.0	1.598	1.598	0.0		0.0	0.0	0.0
1.1		0.383	0.99		1.279	3.31			0.0	0.0
1.2		0.287	1.76		0.959	5.88			0.0	0.0
1.3		0.192	2.31		0.639	7.72			0.0	0.0
1.4		0.096	2.64		0.320	8.82			0.0	0.0
1.5		-0.000	2.76		-0.000	9.19			0.0	0.0
1.6		-0.096	2.64		-0.320	8.82			0.0	0.0
1.7		-0.192	2.31		-0.639	7.72			0.0	0.0
1.8		-0.288	1.76		-0.959	5.88			0.0	0.0
1.9		-0.383	0.99		-1.279	3.31			0.0	0.0
2.0L	0.000	-0.479	0.0	921344.500	-1.598	0.0		0.000	0.0	0.0

	TRUCK LOAD 1				TRUCK LOAD 2				TRUCK LOAD 3			
POINT	REACTION	SHEAR	+MOMENT	-MOMENT	REACTION	SHEAR	+MOMENT	-MOMENT	REACTION	SHEAR	+MOMENT	-MOMENT
1.0R	7.147	7.147	0.0	0.0	0.0	0.0	0.0	0.0	0.0	0.0	0.0	0.0
1.1		6.333	14.6	0.0		0.0	0.0	0.0		0.0	0.0	0.0
1.2		5.519	25.4	0.0		0.0	0.0	0.0		0.0	0.0	0.0
1.3		4.706	32.5	0.0		0.0	0.0	0.0		0.0	0.0	0.0
1.4		3.906	35.9	0.0		0.0	0.0	0.0		0.0	0.0	0.0
1.5		3.255	37.4	0.0		0.0	0.0	0.0		0.0	0.0	0.0
1.6		-3.906	35.9	0.0		0.0	0.0	0.0		0.0	0.0	0.0
1.7		-4.557	31.4	0.0		0.0	0.0	0.0		0.0	0.0	0.0
1.8		-5.208	24.0	0.0		0.0	0.0	0.0		0.0	0.0	0.0
1.9		-5.859	13.5	0.0		0.0	0.0	0.0		0.0	0.0	0.0
2.0L	6.510	-6.510	0.0	0.0	0.0	0.0	0.0	0.0	0.0	0.0	0.0	0.0

NOTE, -MOMENT IS A MOMENT THAT CAUSES TENSION ON THE OUTSIDE OF THE STRUCTURE

WYOMING HIGHWAY DEPARTMENT
BRIDGE DESIGN DIVISION

DATE
PAGE NO 12

SAMPLE PROBLEM NO. 3 TREATED TIMBER BRIDGE 743070PEKR9DES

** MAXIMUM MOMENTS, SHEARS, REACTIONS, & DEFLECTIONS **

SPAN LENGTH OF NO. 1= 23.00 FT

GIRDER WEIGHT= 0.04 KIPS/FT SUPERIMPOSED DEAD LOAD= 0.14 KIPS/FT E(MODULUS)= 1760 KIPS/SQ IN

DESIGN VALUES

	1.0R	1.1	1.2	1.3	1.4	1.5	1.6	1.7	1.8	1.9	2.0L
REACTION	9.2										$21351.0
SHEAR	9.2	8.0	6.8	5.5	4.3	3.3	-4.3	-5.4	-6.5	-7.5	-8.6
+MOMENTS	0.0	18.9	33.0	42.5	47.4	49.4	47.4	41.5	31.6	17.8	0.0
-MOMENTS	0.0	4.3	7.6	10.0	11.5	11.9	11.5	10.0	7.6	4.3	0.0

NOW CALLING 1BRSYS00

WYOMING HIGHWAY DEPARTMENT
BRIDGE DESIGN DIVISION

DATE
PAGE NO 13

SAMPLE PROBLEM NO. 3 TREATED TIMBER BRIDGE

743070PEKR9DES

WORK CODE	DATA CODE	ENTRY 1	ENTRY 2	ENTRY 3	ENTRY 4	ENTRY 5	ENTRY 6	
DC	5	11.00000	1.00000	0.0	0.0	0.0	0.0	*****
	501	0.0	0.0	0.0	0.0	1.00000	0.0	0
	502	0.0	0.0	0.0	0.0	1.33000	0.0	0
	510	1.00000	7.00000	0.0	0.0	0.0	0.0	0
	520	100.00000	102.00000	105.00000	0.0	0.0	0.0	0
	590	100.00000	1800.00000	300.00000	415.00000	0.0	0.0	0
	591	12.00000	0.0	6.00000	0.0	0.0	0.0	0
	590	102.00000	1800.00000	120.00000	415.00000	0.0	0.0	0
	590	105.00000	1800.00000	120.00000	415.00000	0.0	0.0	0

SAMPLE PROBLEM NO. 3 TREATED TIMBER BRIDGE 743070PEKR9DES

TIMBER SECTION

SPAN 1 @ 0 TENTHS POINT

INPUT SECTION DIMENSIONS

DEPTH OF WEB 20.00 THICKNESS OF WEB 6.00

DESIGN STRESS OF TIMBER IN FLEXURE 1800.00
HORIZONTAL SHEAR 300.00
COMPRESSION PERPEN.TO GRAIN 415.00

BEARING DATA LENGTH 12.00 WIDTH 6.00 DISTANCE FROM END OF MEMBER 0.0

LOAD # 1

	DEAD LOAD	LIVE LOAD
SHEAR	2.08	7.15
REACTION	2.08	7.15

ACTUAL STRESSES

	DESIGN POINTS						
	ONE	TWO	THREE	FOUR	FIVE	SIX	SEVEN
HORIZ. SHEAR				115.36			
BEARING	128.12						

ALLOWABLE STRESSES

FLEXURE 1800.00 HORIZONTAL SHEAR 300.00 BEARING 415.00

SAMPLE PROBLEM NO. 3 TREATED TIMBER BRIDGE 743070PEKR9DES

TIMBER SECTION

SPAN 1 @ 2 TENTHS POINT

INPUT SECTION DIMENSIONS

DEPTH OF WEB 20.00 THICKNESS OF WEB 6.00

DESIGN STRESS OF TIMBER IN FLEXURE 1800.00
HORIZONTAL SHEAR 120.00
COMPRESSION PERPEN.TO GRAIN 415.00

LOAD # 1

	DEAD LOAD	LIVE LOAD
MOMENT	7.65	25.39
SHEAR	1.25	5.52

ACTUAL STRESSES

	DESIGN POINTS						
	ONE	TWO	THREE	FOUR	FIVE	SIX	SEVEN
FLEXURE	0.0	991.04	991.04	0.0	991.04	991.04	0.0
HORIZ. SHEAR				84.57			

ALLOWABLE STRESSES

FLEXURE 1800.00 HORIZONTAL SHEAR 120.00 BEARING 415.00

SAMPLE PROBLEM NO. 3 TREATED TIMBER BRIDGE 743070PEKR9DES

TIMBER SECTION

SPAN 1 @ 5 TENTHS POINT
INPUT SECTION DIMENSIONS

DEPTH OF WEB 20.00 THICKNESS OF WEB 6.00

DESIGN STRESS OF TIMBER IN FLEXURE 1800.00
HORIZONTAL SHEAR 120.00
COMPRESSION PERPEN.TO GRAIN 415.00

LOAD # 1

	DEAD LOAD	LIVE LOAD
MOMENT	11.95	37.43
SHEAR	-0.00	3.26

ACTUAL STRESSES

	DESIGN POINTS						
	ONE	TWO	THREE	FOUR	FIVE	SIX	SEVEN
FLEXURE	0.0	1481.37	1481.37	0.0	1481.37	1481.37	0.0
HORIZ. SHEAR				40.69			

ALLOWABLE STRESSES
FLEXURE 1800.00 HORIZONTAL SHEAR 120.00 BEARING 415.00

NOW CALLING 18RSYS50

SAMPLE PROBLEM NO. 3 TREATED TIMBER BRIDGE 743070PEKR9DES

INVENTORY RATING FOR SPAN 1 @ 0 TENTH (LOAD 1)

	FLEXURE STRESS	HORIZONTAL SHEAR	END BEARING
POS M.	********	3.066	3.890

OPERATING RATING FOR SPAN 1 @ 0 TENTH (LOAD 1)

	FLEXURE STRESS	HORIZONTAL SHEAR	END BEARING
POS M.	********	4.173	5.270

INVENTORY RATING FOR SPAN 1 @ 2 TENTH (LOAD 1)

	FLEXURE STRESS	HORIZONTAL SHEAR	END BEARING
POS M.	2.062	1.513	********

OPERATING RATING FOR SPAN 1 @ 2 TENTH (LOAD 1)

	FLEXURE STRESS	HORIZONTAL SHEAR	END BEARING
POS M.	2.842	2.087	********

INVENTORY RATING FOR SPAN 1 @ 5 TENTH (LOAD 1)

	FLEXURE STRESS	HORIZONTAL SHEAR	END BEARING
POS M.	1.284	2.949	********

OPERATING RATING FOR SPAN 1 @ 5 TENTH (LOAD 1)

	FLEXURE STRESS	HORIZONTAL SHEAR	END BEARING
POS M.	1.813	3.923	********

INVENTORY RATING FOR TIMBER DECK (LOAD 1)

	FLEXURE STRESS	HORIZONTAL SHEAR	END BEARING
POS M.	1.021	0.935	********

OPERATING RATING FOR TIMBER DECK (LOAD 1)

	FLEXURE STRESS	HORIZONTAL SHEAR	END BEARING
POS M.	2.558	1.249	********

SAMPLE PROBLEM NO. 3 TREATED TIMBER BRIDGE

743070PEKR9DES

LOAD RATING SUMMARY SHEET

OPERATING RATING

CONTROL POINT--SPAN 0 @ 0 TENTH (LOAD 1)

CONCRETE SECTION ; (POSITIVE STEEL)
POSITIVE MOMENT RATING FACTOR = 0.251
LOAD RATING = 3.765 TONS

TOTAL WEIGHT OF LOAD TYPE 1 = 15.000 TONS

NOW CALLING 0 1BRSYS00

SAMPLE PROBLEM NO. 3 TREATED TIMBER BRIDGE

743070PEKR9DES

LOAD RATING SUMMARY SHEET

INVENTORY RATING

CONTROL POINT-- TIMBER DECK (LOAD 1)

BEARING STRESS RATING FACTOR = 0.935
LOAD RATING = 14.020 TONS

4.6 REINFORCED CONCRETE BOX GIRDER

The sample problem for a reinforced concrete box girder is the design run for a 3 span box girder bridge. It is supported by two integral legs which are coded as spans 8 and 9 to fit the cell type configuration. There are 6 different cross sections, each one made up equivalent to the box section or leg section. The actual section and the equivalent section for each one are shown in the drawings.

Extending as they do below the ground surface, an assumption of fixity is made at some depth below the ground surface, and the length of the legs determined accordingly.

The entire superstructure is assumed to act as a unit and accordingly has 6 wheel lines applied to it which produces large moments, shears, and reactions. The design load is the HS-20-44 truck and lane as per AASHO.

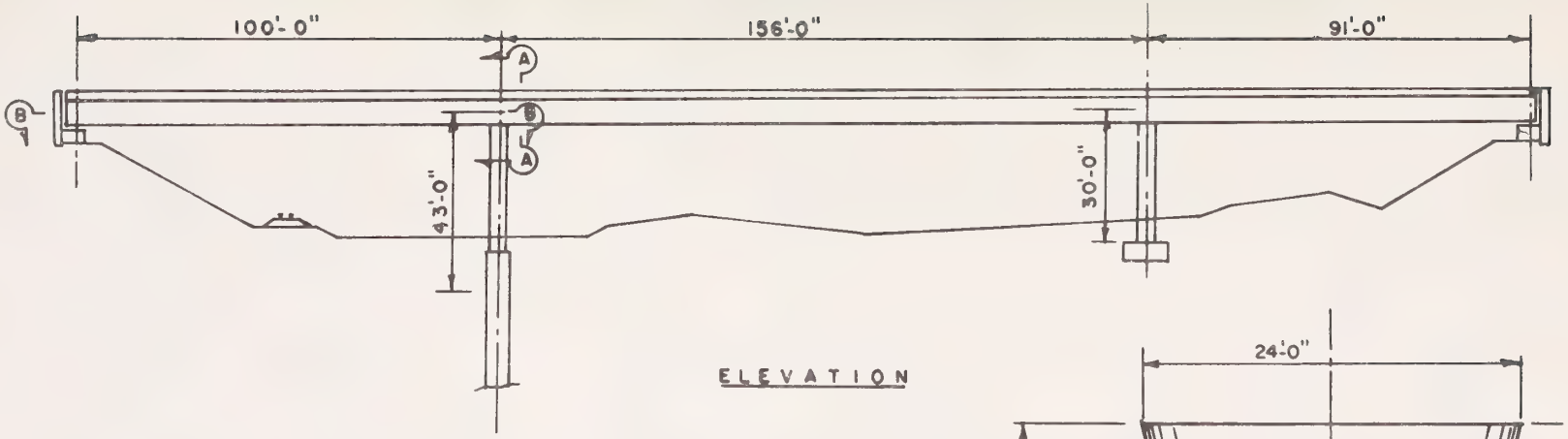

ELEVATION

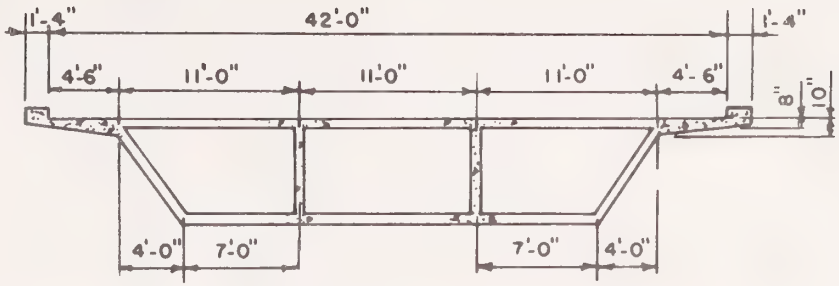

SECTION A-A

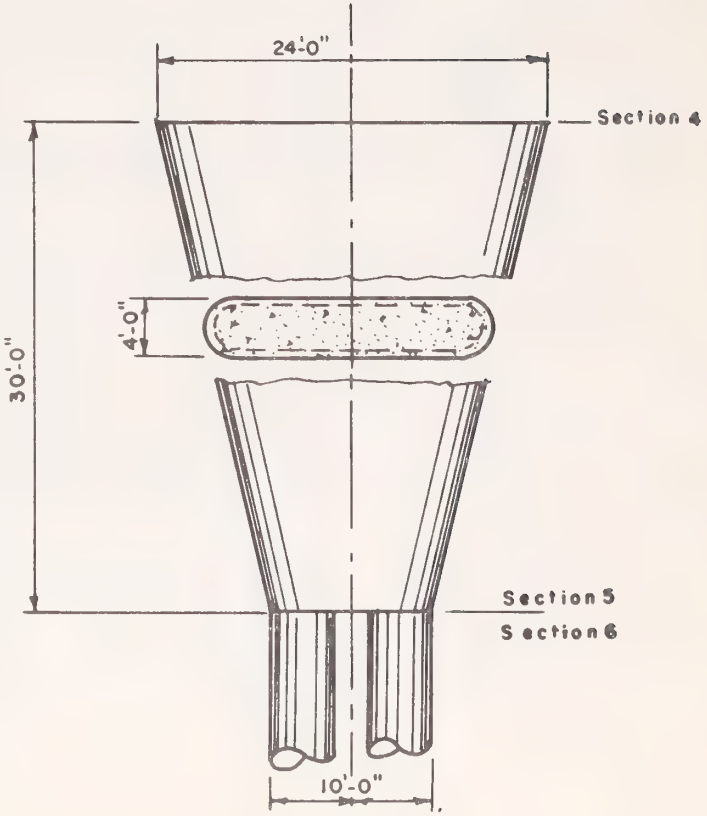

BENT ELEVATION

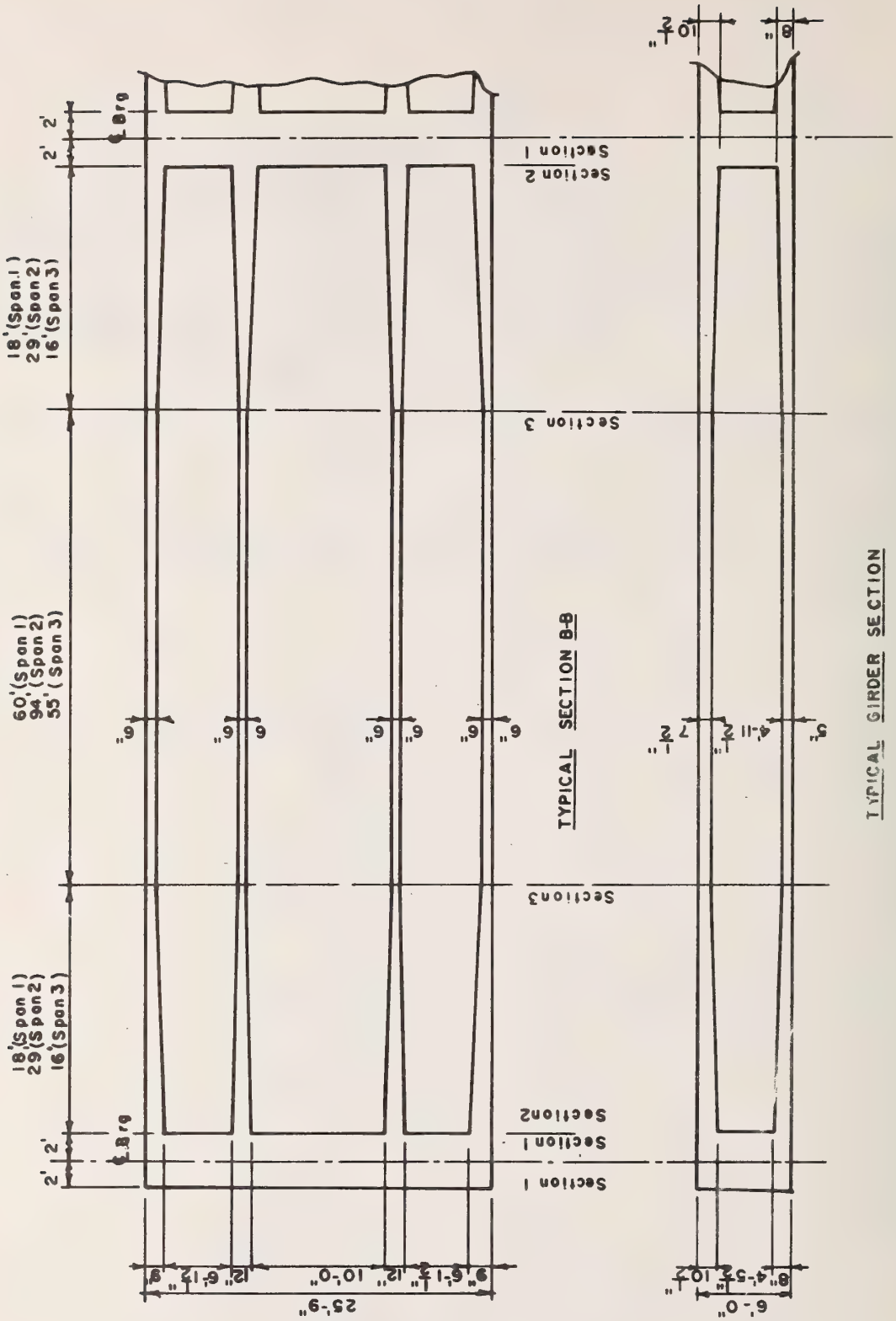
TYPICAL SECTION B-B
TYPICAL GIRDER SECTION
Section 1
Section 2
Section 3
Section 3
Section 2
Section 1
℄ Brg
℄ Brg
2'
2'
2'
2'
18'(Span 1)
29'(Span 2)
16'(Span 3)
60'(Span 1)
94'(Span 2)
55'(Span 3)
18'(Span 1)
29'(Span 2)
16'(Span 3)
6"
6"
6"
6"
6"
6"
5"
4'-11½"
7½"
10½"
8"
6'-0"
8"
4'-5½"
10½"
25'-9"
9"
6'-1½"
12"
10'-0"
12"
6'-1½"
9"
(2)

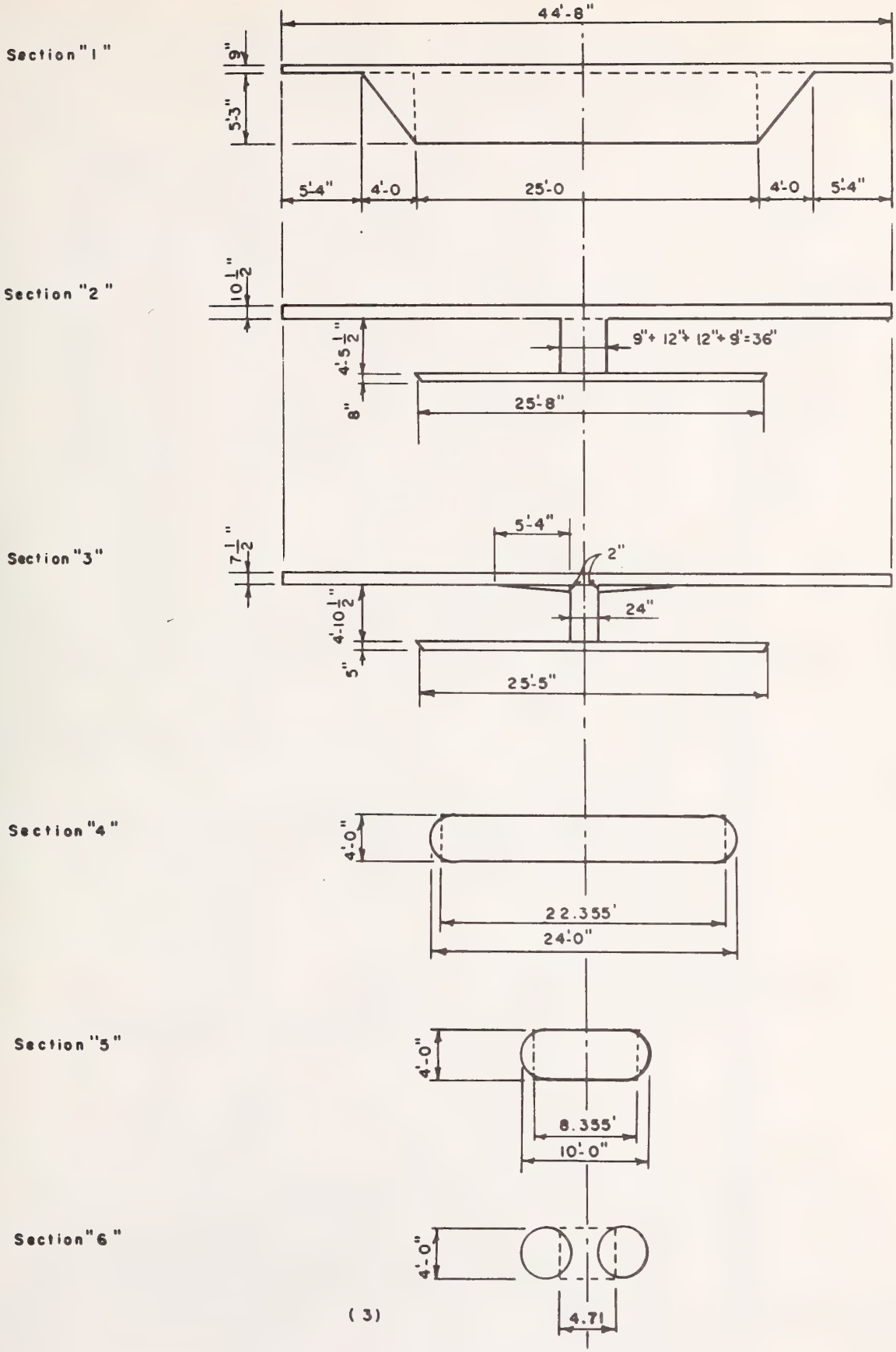
Section "1"
44'-8"
9"
5'-3"
5'-4"
4'-0
25'-0
4'-0
5'-4"
Section "2"
10 1/2"
4'-5 1/2"
8"
9"+ 12"+ 12"+ 9"=36"
25'-8"
Section "3"
7 1/2"
5'-4"
2"
4'-10 1/2"
5"
24"
25'-5"
Section "4"
4'-0"
22.355'
24'-0"
Section "5"
4'-0"
8.355'
10'-0"
Section "6"
4'-0"
4.71

(3)

FORM C-16
Rev. 3/11/69

WYOMING STATE HIGHWAY DEPARTMENT
CHEYENNE WYOMING
BRIDGE DIVISION

SHEET NO 1 OF 5
BY DAG DATE 9-11-73
CHECKED

//EXEC BRSYSØØ

DESIGN SYSTEM

Employee No. 68	Dept. Code	Pos/Job D/Code 75	Work Code	Str. No.
58577	7Ø	DXC4	DES	

1 COMMENT CARD

1ØØ	SAMPLE PROBLEM FOR REINFORCED CONCRETE BOX GIRDER

1 2 WORK CODE	3 5 DATA CODE	ENTRY 1 (6–15)	ENTRY 2 (25)	ENTRY 3 (35)	ENTRY 4 (45)	ENTRY 5 (55)	ENTRY 6 (65)	66 CONT
DC	ØØ1	11111.	5.	6.	Ø.			
	1Ø1	1.	1ØØ.	2Ø.	8Ø.	2.	53.5	
	1Ø2	53.5	59.5					
	1Ø3	2.	1.	2.	2.	2Ø.	3.	
	1Ø4	8Ø.	3.	98.	2.	98.	1.	
	1Ø5	1ØØ.	1.					
	1Ø1	2.	156.	31.	125.	2.	53.5	
	1Ø2	53.5	59.5					
	1Ø3	2.	1.	2.	2.	31.	3.	
	1Ø4	125.	3.	154.	2.	154.	1.	
	1Ø5	156.	1.					
	1Ø1	3.	91.	18.	73.	2.	53.5	
	1Ø2	53.5	59.5					
	1Ø3	2.	1.	2.	2.	18.	3.	
	1Ø4	73.	3.	89.	2.	89.	1.	
	1Ø5	91.	1.					
	1Ø1	8.	43.	43.		1.	48.	

TRAILER CARD

~~999~~	

1 3

NOTE: A trailer card must follow the last structure card containing data

FORM C-16
Rev. 3/11/69

WYOMING STATE HIGHWAY DEPARTMENT
CHEYENNE WYOMING
BRIDGE DIVISION

DESIGN SYSTEM

SHEET NO 2 OF 5
BY DAG DATE 9-12-73
CHECKED

Employee No. 68	Dept. Code	P or D	Job Code 75	Work Code	Str. No.

//EXEC BRSYSØØ

I COMMENT CARD

1 2 WORK CODE	3 5 DATA CODE	ENTRY 1 (6–15)	ENTRY 2 (25)	ENTRY 3 (35)	ENTRY 4 (45)	ENTRY 5 (55)	ENTRY 6 (65)	66 CONT
	1Ø2	48.						
	1Ø3	Ø.	4.	3Ø.	5.	3Ø.	6.	
	1Ø4	43.	6.					
	1Ø1	9.	3Ø.	3Ø.		1.	48.	
	1Ø2	48.						
	1Ø3	Ø.	4.	3Ø.	5.			
	1Ø9		9Ø.	9Ø.				
	111	1.	3ØØ.		536.	9.		
	112	63.	48.	63.	48.			
	111	2.	42.	3Ø8.	536.	1Ø.5	8.	
	111	3.	24.	3Ø5.	536.	7.5	5.	
	112	2.	64.	2.	64.			
	111	4.	268.26					
	111	5.	1ØØ.26					
	111	6.	56.52					
	4Ø1	15.	16.					

TRAILER CARD

1 3

NOTE: A trailer card must follow the last structure card containing data

FORM C-16
Rev. 3/11/69

WYOMING STATE HIGHWAY DEPARTMENT
CHEYENNE WYOMING
BRIDGE DIVISION

DESIGN SYSTEM

SHEET NO. 3 OF 5
BY DAG DATE 9-12-73
CHECKED

Employee No. 68	Dept. Code	P or D	Job Code 75	Work Code	Str. No.

//EXEC BRSYSØØ

I COMMENT CARD

1 2 WORK CODE	3 5 DATA CODE	ENTRY 1 (6–15)	ENTRY 2 (25)	ENTRY 3 (35)	ENTRY 4 (45)	ENTRY 5 (55)	ENTRY 6 (65)	66 CONT
DC	ØØ2	11111.	6.	1ØØ.				
	2Ø1	1.24	.15	33ØØ.				
	2Ø2	Ø.	8.	9.				
	3Ø1	13.	4.	14.	16.	14.	16.	
	3Ø2	3Ø.						
	3Ø9	.32	9.	13.				
DC	ØØ5	1Ø.	Ø.	Ø.				
	5Ø1	.4	.4	.4				
	5Ø2	.55	.55	.55				
	51Ø	1.	3.	2.	3.	3.	3.	
	51Ø	4.	3.	5.	3.	6.	3.	
	52Ø	1ØØ.	1Ø4.	11Ø.	2ØØ.	2Ø5.	21Ø.	
	52Ø	3ØØ.	3Ø6.	8ØØ.	8Ø7.	9ØØ.	1ØØØ.	
	55Ø	1ØØ.	6ØØØØ.	4ØØØØ.	325Ø.	1ØØ.	1Ø.	1
	551	2.	3.5					
	55Ø	1Ø4.	6ØØØØ.	4ØØØØ.	325Ø.	1ØØ.	1Ø.	1

TRAILER CARD

1 3

NOTE: A trailer card must follow the last structure card containing data

FORM C-16
Rev. 3/11/69

WYOMING STATE HIGHWAY DEPARTMENT
CHEYENNE WYOMING
BRIDGE DIVISION

SHEET NO 4 OF 5
BY DAG DATE 9-12-73
CHECKED

//EXEC BRSYSØØ

DESIGN SYSTEM

Employee No. 68	Dept. Code	P or D	Job Code 75	Work Code	Str. No.

I COMMENT CARD

1 2 WORK CODE	3 5 DATA CODE	ENTRY 1 (6–15)	ENTRY 2 (25)	ENTRY 3 (35)	ENTRY 4 (45)	ENTRY 5 (55)	ENTRY 6 (65)	66 CONT
	551	2.	3.5					
	55Ø	11Ø.	6ØØØØ.	4ØØØØ.	325Ø.	1ØØ.	1Ø.	1
	551	2.	3.5					
	55Ø	2ØØ.	6ØØØØ.	4ØØØØ.	325Ø.	1ØØ.	1Ø.	1
	551	2.	3.5					
	55Ø	2Ø5.	6ØØØØ.	4ØØØØ.	325Ø.	1ØØ.	1Ø.	1
	551	2.	3.5					
	55Ø	21Ø.	6ØØØØ.	4ØØØØ.	325Ø.	1ØØ.	1Ø.	1
	551	2.	3.5					
	55Ø	3ØØ.	6ØØØØ.	4ØØØØ.	325Ø.	1ØØ.	1Ø.	1
	551	2.	3.5					
	55Ø	3Ø6.	6ØØØØ.	4ØØØØ.	325Ø.	1ØØ.	1Ø.	1
	551	2.	3.5					
	55Ø	8ØØ.	6ØØØØ.	4ØØØØ.	325Ø.	1ØØ.	1Ø.	1
	551	4.	4					
	55Ø	8Ø7.	6ØØØØ.	4ØØØØ.	325Ø.	1ØØ.	1Ø.	1
	551	4.	4.					

TRAILER CARD

1 3

NOTE: A trailer card must follow the last structure card containing data

FORM C-16
Rev. 3/11/69

WYOMING STATE HIGHWAY DEPARTMENT
CHEYENNE WYOMING
BRIDGE DIVISION

DESIGN SYSTEM

SHEET NO 5 OF 5
BY DAG DATE 9-12-73
CHECKED

Employee No. 68	Dept. Code	P or D	Job Code 75	Work Code	Str. No.

//EXEC BRSYSØØ

1 COMMENT CARD

1	2	3	5							66
WORK	CODE	DATA	CODE	ENTRY 1 (6–15)	ENTRY 2 (25)	ENTRY 3 (35)	ENTRY 4 (45)	ENTRY 5 (55)	ENTRY 6 (65)	CONT
		55Ø		9ØØ.	6ØØØØ.	4ØØØØ.	325Ø.	1ØØ.	1Ø.	1
		551		4.	4.					
		550		1ØØØ.	6ØØØØ.	4ØØØØ.	325Ø.	1ØØ.	1Ø.	1
		551		4.	4.					

TRAILER CARD

999

1 3

NOTE: A trailer card must follow the last structure card containing data

WYOMING HIGHWAY DEPARTMENT
BRIDGE DESIGN DIVISION

DATE
PAGE NO. 1

SAMPLE PROBLEM FOR REINFORCED CONCRETE BOX GIRDER 585770 DXC4DES

INPUT AS RECEIVED BY COMPUTER

WORK CODE	DATA CODE	ENTRY 1	ENTRY 2	ENTRY 3	ENTRY 4	ENTRY 5	ENTRY 6
DC	1	11111.00000	5.00000	6.00000	0.0	0.0	0.0
	101	1.00000	100.00000	20.00000	80.00000	2.00000	53.50000
	102	53.50000	58.50000	0.0	0.0	0.0	0.0
	103	2.00000	1.00000	2.00000	2.00000	20.00000	3.00000
	104	80.00000	3.00000	98.00000	2.00000	98.00000	1.00000
	105	100.00000	1.00000	0.0	0.0	0.0	0.0
	101	2.00000	156.00000	31.00000	125.00000	2.00000	53.50000
	102	53.50000	58.50000	0.0	0.0	0.0	0.0
	103	2.00000	1.00000	2.00000	2.00000	31.00000	3.00000
	104	125.00000	3.00000	154.00000	2.00000	154.00000	1.00000
	105	156.00000	1.00000	0.0	0.0	0.0	0.0
	101	3.00000	91.00000	18.00000	73.00000	2.00000	53.50000
	102	53.50000	58.50000	0.0	0.0	0.0	0.0
	103	2.00000	1.00000	2.00000	2.00000	18.00000	3.00000
	104	73.00000	3.00000	88.00000	2.00000	88.00000	1.00000
	105	91.00000	1.00000	0.0	0.0	0.0	0.0
	101	8.00000	43.00000	43.00000	0.0	1.00000	48.00000
	102	48.00000	0.0	0.0	0.0	0.0	0.0
	103	0.0	4.00000	30.00000	5.00000	30.00000	6.00000
	104	43.00000	6.00000	0.0	0.0	0.0	0.0
	101	9.00000	30.00000	30.00000	0.0	1.00000	48.00000
	102	48.00000	0.0	0.0	0.0	0.0	0.0
	103	0.0	4.00000	30.00000	5.00000	0.0	0.0
	104	0.0	80.00000	80.00000	0.0	0.0	0.0
	111	1.00000	300.00000	0.0	536.00000	9.00000	0.0
	112	43.00000	48.00000	63.00000	48.00000	0.0	0.0
	111	2.00000	42.00000	308.00000	536.00000	10.50000	8.00000
	111	3.00000	24.00000	305.00000	536.00000	7.50000	5.00000
	112	2.00000	64.00000	2.00000	64.00000	0.0	0.0
	111	4.00000	268.25977	0.0	0.0	0.0	0.0
	111	5.00000	100.25999	0.0	0.0	0.0	0.0
	111	6.00000	56.51999	0.0	0.0	0.0	0.0
	401	15.00000	16.00000	0.0	0.0	0.0	0.0

SAMPLE PROBLEM FOR REINFORCED CONCRETE BOX GIRDER 585770 DXC4DES

BEAM PROPERTIES STRAGHT LINE DEPTH VARIATION.

SPAN NO. 1 SPAN LENGTH = 100.000 SPAN RATIO = 1.000

POINT	BEAM DEPTH	XSECT AREA	MOMENTS OF INERTIA	DIST TO CENT(X)	WIDTH OF WEB	FLANGE THICKNESS TOP	FLANGE THICKNESS BOT	FLANGE WIDTH TOP	FLANGE WIDTH BOT
1.00	53.50	23898.0	8155568.	33.8	300.000	9.000	0.0	536.00	0.0
1.05	55.00	9811.2	7446774.	45.4	39.000	10.000	7.500	536.00	307.50
1.10	56.50	8878.8	6836768.	45.8	34.000	9.167	6.667	536.00	306.67
1.15	58.00	7932.7	6184618.	46.3	29.000	8.333	5.833	536.00	305.83
1.20	59.50	6973.0	5492758.	47.0	24.000	7.500	5.000	536.00	305.00
1.25	59.50	7101.0	5528359.	47.3	24.000	7.500	5.000	536.00	305.00
1.30	59.50	7101.0	5528359.	47.3	24.000	7.500	5.000	536.00	305.00
1.35	59.50	7101.0	5528359.	47.3	24.000	7.500	5.000	536.00	305.00
1.40	59.50	7101.0	5528359.	47.3	24.000	7.500	5.000	536.00	305.00
1.45	59.50	7101.0	5528359.	47.3	24.000	7.500	5.000	536.00	305.00
1.50	59.50	7101.0	5528359.	47.3	24.000	7.500	5.000	536.00	305.00
1.55	59.50	7101.0	5528359.	47.3	24.000	7.500	5.000	536.00	305.00
1.60	59.50	7101.0	5528359.	47.3	24.000	7.500	5.000	536.00	305.00
1.65	59.50	7101.0	5528359.	47.3	24.000	7.500	5.000	536.00	305.00
1.70	59.50	7101.0	5528359.	47.3	24.000	7.500	5.000	536.00	305.00
1.75	59.50	7101.0	5528359.	47.3	24.000	7.500	5.000	536.00	305.00
1.80	59.50	7101.0	5528359.	47.3	24.000	7.500	5.000	536.00	305.00
1.85	58.00	8060.7	6220341.	46.6	29.000	8.333	5.833	536.00	305.83
1.90	56.50	9006.8	6869522.	46.1	34.000	9.167	6.667	536.00	306.67
1.95	55.00	9939.2	7480868.	45.6	39.000	10.000	7.500	536.00	307.50
2.00	53.50	23898.0	8155568.	33.8	300.000	9.000	0.0	536.00	0.0

	FIXED END MOMENTS FAC	FCA
1.10	-0.0840	0.0082
1.20	-0.1361	0.0307
1.30	-0.1574	0.0634
1.40	-0.1535	0.0996
1.50	-0.1318	0.1321
1.60	-0.0993	0.1538
1.70	-0.0632	0.1576
1.80	-0.0306	0.1362
1.90	-0.0082	0.0840

STIFFNESS KAC= 3.1525 KCA= 3.1596

CARRY OVERS CAC= 0.5373 CCA= 0.5361

WYOMING HIGHWAY DEPARTMENT
BRIDGE DESIGN DIVISION

DATE
PAGE NO. 3

SAMPLE PROBLEM FOR REINFORCED CONCRETE BOX GIRDER 585770 DXC4DES

BEAM PROPERTIES STRAGHT LINE DEPTH VARIATION.

SPAN NO. 2 SPAN LENGTH = 156.000 SPAN RATIO = 1.560

POINT	BEAM DEPTH	XSECT AREA	MOMENTS OF INERTIA	DIST TO CENT(X)	WIDTH OF WEB	FLANGE THICKNESS TOP	FLANGE THICKNESS BOT	FLANGE WIDTH TOP	FLANGE WIDTH BOT
2.00	53.50	23898.0	8155568.	33.8	300.000	9.000	0.0	536.00	0.0
2.05	55.01	9693.5	7333490.	45.3	38.400	9.900	7.400	536.00	307.40
2.10	56.52	8792.0	6753685.	45.8	33.559	9.093	6.593	536.00	306.59
2.15	58.03	7877.2	6135428.	46.3	28.717	8.286	5.786	536.00	305.79
2.20	59.50	7101.0	5528359.	47.3	24.000	7.500	5.000	536.00	305.00
2.25	59.50	7101.0	5528359.	47.3	24.000	7.500	5.000	536.00	305.00
2.30	59.50	7101.0	5528359.	47.3	24.000	7.500	5.000	536.00	305.00
2.35	59.50	7101.0	5528359.	47.3	24.000	7.500	5.000	536.00	305.00
2.40	59.50	7101.0	5528359.	47.3	24.000	7.500	5.000	536.00	305.00
2.45	59.50	7101.0	5528359.	47.3	24.000	7.500	5.000	536.00	305.00
2.50	59.50	7101.0	5528359.	47.3	24.000	7.500	5.000	536.00	305.00
2.55	59.50	7101.0	5528359.	47.3	24.000	7.500	5.000	536.00	305.00
2.60	59.50	7101.0	5528359.	47.3	24.000	7.500	5.000	536.00	305.00
2.65	59.50	7101.0	5528359.	47.3	24.000	7.500	5.000	536.00	305.00
2.70	59.50	7101.0	5528359.	47.3	24.000	7.500	5.000	536.00	305.00
2.75	59.50	7101.0	5528359.	47.3	24.000	7.500	5.000	536.00	305.00
2.80	59.50	7101.0	5528359.	47.3	24.000	7.500	5.000	536.00	305.00
2.85	58.03	8005.2	6171084.	46.6	28.717	8.286	5.786	536.00	305.79
2.90	56.52	8920.0	6788733.	46.0	33.559	9.093	6.593	536.00	306.59
2.95	55.01	9821.5	7367470.	45.6	38.400	9.900	7.400	536.00	307.40
3.00	53.50	23898.0	8155568.	33.8	300.000	9.000	0.0	536.00	0.0

	FIXED END MOMENTS FCF	FEC
2.10	-0.1310	0.0128
2.20	-0.2119	0.0480
2.30	-0.2449	0.0988
2.40	-0.2390	0.1551
2.50	-0.2052	0.2057
2.60	-0.1547	0.2394
2.70	-0.0985	0.2453
2.80	-0.0478	0.2121
2.90	-0.0127	0.1310

STIFFNESS KCF= 2.0103 KFC= 2.0137

CARRY OVERS CCF= 0.5359 CFC= 0.5350

SAMPLE PROBLEM FOR REINFORCED CONCRETE BOX GIRDER 585770 DXC4DES

BEAM PROPERTIES STRAGHT LINE DEPTH VARIATION.

SPAN NO. 3 SPAN LENGTH = 91.000 SPAN RATIO = 0.910

POINT	BEAM DEPTH	XSECT AREA	MOMENTS OF INERTIA	DIST TO CENT(X)	WIDTH OF WEB	FLANGE THICKNESS TOP	FLANGE THICKNESS BOT	FLANGE WIDTH TOP	FLANGE WIDTH BOT
3.00	53.50	23898.0	8155568.	33.8	300.000	9.000	0.0	536.00	0.0
3.05	55.02	9837.7	7476293.	45.4	39.131	10.022	7.522	536.00	307.52
3.10	56.53	8882.4	6844727.	45.8	34.012	9.169	6.669	536.00	306.67
3.15	58.05	7913.0	6174023.	46.4	28.894	8.316	5.816	536.00	305.82
3.20	59.50	7101.0	5528359.	47.3	24.000	7.500	5.000	536.00	305.00
3.25	59.50	7101.0	5528359.	47.3	24.000	7.500	5.000	536.00	305.00
3.30	59.50	7101.0	5528359.	47.3	24.000	7.500	5.000	536.00	305.00
3.35	59.50	7101.0	5528359.	47.3	24.000	7.500	5.000	536.00	305.00
3.40	59.50	7101.0	5528359.	47.3	24.000	7.500	5.000	536.00	305.00
3.45	59.50	7101.0	5528359.	47.3	24.000	7.500	5.000	536.00	305.00
3.50	59.50	7101.0	5528359.	47.3	24.000	7.500	5.000	536.00	305.00
3.55	59.50	7101.0	5528359.	47.3	24.000	7.500	5.000	536.00	305.00
3.60	59.50	7101.0	5528359.	47.3	24.000	7.500	5.000	536.00	305.00
3.65	59.50	7101.0	5528359.	47.3	24.000	7.500	5.000	536.00	305.00
3.70	59.50	7101.0	5528359.	47.3	24.000	7.500	5.000	536.00	305.00
3.75	59.50	7101.0	5528359.	47.3	24.000	7.500	5.000	536.00	305.00
3.80	59.50	7101.0	5528359.	47.3	24.000	7.500	5.000	536.00	305.00
3.85	58.05	8041.0	6209787.	46.6	28.894	8.316	5.816	536.00	305.82
3.90	56.53	9010.4	6879936.	46.1	34.012	9.169	6.669	536.00	306.67
3.95	55.02	9965.7	7510458.	45.6	39.131	10.022	7.522	536.00	307.52
4.00	53.50	23898.0	8155568.	33.8	300.000	9.000	0.0	536.00	0.0

	FIXED END MOMENTS FEG	FGE
3.10	-0.0765	0.0074
3.20	-0.1239	0.0279
3.30	-0.1433	0.0577
3.40	-0.1398	0.0906
3.50	-0.1200	0.1202
3.60	-0.0904	0.1400
3.70	-0.0575	0.1435
3.80	-0.0278	0.1240
3.90	-0.0074	0.0765

STIFFNESS KEG= 3.4691 KGE= 3.4748

CARRY OVERS CEG= 0.5374 CGE= 0.5365

SAMPLE PROBLEM FOR REINFORCED CONCRETE BOX GIRDER 585770 DXC4DES

BEAM PROPERTIES STRAGHT LINE DEPTH VARIATION.

SPAN NO. 8 SPAN LENGTH = 43.000 SPAN RATIO = 0.430

POINT	BEAM DEPTH	XSECT AREA	MOMENTS OF INERTIA	DIST TO CENT(X)	WIDTH OF WEB	FLANGE THICKNESS TOP	FLANGE THICKNESS BOT	FLANGE WIDTH TOP	FLANGE WIDTH BOT
8.00	48.00	12876.5	2472281.	24.0	268.260	0.0	0.0	0.0	0.0
8.05	48.00	12298.5	2361320.	24.0	256.220	0.0	0.0	0.0	0.0
8.10	48.00	11720.6	2250360.	24.0	244.180	0.0	0.0	0.0	0.0
8.15	48.00	11142.7	2139400.	24.0	232.140	0.0	0.0	0.0	0.0
8.20	48.00	10564.8	2028440.	24.0	220.100	0.0	0.0	0.0	0.0
8.25	48.00	9986.9	1917478.	24.0	208.060	0.0	0.0	0.0	0.0
8.30	48.00	9409.0	1806518.	24.0	196.020	0.0	0.0	0.0	0.0
8.35	48.00	8831.0	1695558.	24.0	183.980	0.0	0.0	0.0	0.0
8.40	48.00	8253.1	1584597.	24.0	171.940	0.0	0.0	0.0	0.0
8.45	48.00	7675.2	1473637.	24.0	159.900	0.0	0.0	0.0	0.0
8.50	48.00	7097.3	1362678.	24.0	147.860	0.0	0.0	0.0	0.0
8.55	48.00	6519.4	1251717.	24.0	135.820	0.0	0.0	0.0	0.0
8.60	48.00	5941.4	1140757.	24.0	123.780	0.0	0.0	0.0	0.0
8.65	48.00	5363.5	1029797.	24.0	111.740	0.0	0.0	0.0	0.0
8.70	48.00	2713.0	520888.	24.0	56.520	0.0	0.0	0.0	0.0
8.75	48.00	2713.0	520888.	24.0	56.520	0.0	0.0	0.0	0.0
8.80	48.00	2713.0	520888.	24.0	56.520	0.0	0.0	0.0	0.0
8.85	48.00	2713.0	520888.	24.0	56.520	0.0	0.0	0.0	0.0
8.90	48.00	2713.0	520888.	24.0	56.520	0.0	0.0	0.0	0.0
8.95	48.00	2713.0	520888.	24.0	56.520	0.0	0.0	0.0	0.0
9.00	48.00	2713.0	520888.	24.0	56.520	0.0	0.0	0.0	0.0

FIXED END MOMENTS

	FCD	FDC
8.10	-0.0370	0.0018
8.20	-0.0624	0.0069
8.30	-0.0769	0.0145
8.40	-0.0813	0.0239
8.50	-0.0768	0.0340
8.60	-0.0647	0.0433
8.70	-0.0469	0.0498
8.80	-0.0259	0.0482
8.90	-0.0077	0.0329

STIFFNESS KCD= 1.9916 KDC= 0.7445

CARRY OVERS CCD= 0.3121 CDC= 0.8349

SAMPLE PROBLEM FOR REINFORCED CONCRETE BOX GIRDER 585770 DXC4DES

BEAM PROPERTIES STRAGHT LINE DEPTH VARIATION.

SPAN NO. 9 SPAN LENGTH = 30.000 SPAN RATIO = 0.300

POINT	BEAM DEPTH	XSECT AREA	MOMENTS OF INERTIA	DIST TO CENT(X)	WIDTH OF WEB	FLANGE THICKNESS TOP	FLANGE THICKNESS BOT	FLANGE WIDTH TOP	FLANGE WIDTH BOT
9.00	48.00	12876.5	2472281.	24.0	268.260	0.0	0.0	0.0	0.0
9.05	48.00	12473.3	2394865.	24.0	259.860	0.0	0.0	0.0	0.0
9.10	48.00	12070.1	2317453.	24.0	251.460	0.0	0.0	0.0	0.0
9.15	48.00	11666.9	2240038.	24.0	243.060	0.0	0.0	0.0	0.0
9.20	48.00	11263.7	2162624.	24.0	234.660	0.0	0.0	0.0	0.0
9.25	48.00	10860.5	2085210.	24.0	226.260	0.0	0.0	0.0	0.0
9.30	48.00	10457.3	2007796.	24.0	217.860	0.0	0.0	0.0	0.0
9.35	48.00	10054.1	1930381.	24.0	209.460	0.0	0.0	0.0	0.0
9.40	48.00	9650.9	1852968.	24.0	201.060	0.0	0.0	0.0	0.0
9.45	48.00	9247.7	1775553.	24.0	192.660	0.0	0.0	0.0	0.0
9.50	48.00	8844.5	1698138.	24.0	184.260	0.0	0.0	0.0	0.0
9.55	48.00	8441.3	1620725.	24.0	175.860	0.0	0.0	0.0	0.0
9.60	48.00	8038.1	1543310.	24.0	167.460	0.0	0.0	0.0	0.0
9.65	48.00	7634.9	1465896.	24.0	159.060	0.0	0.0	0.0	0.0
9.70	48.00	7231.7	1388482.	24.0	150.660	0.0	0.0	0.0	0.0
9.75	48.00	6828.5	1311068.	24.0	142.260	0.0	0.0	0.0	0.0
9.80	48.00	6425.3	1233654.	24.0	133.860	0.0	0.0	0.0	0.0
9.85	48.00	6022.1	1156240.	24.0	125.460	0.0	0.0	0.0	0.0
9.90	48.00	5618.9	1078826.	24.0	117.060	0.0	0.0	0.0	0.0
9.95	48.00	5215.7	1001412.	24.0	108.660	0.0	0.0	0.0	0.0
10.00	48.00	4812.5	923998.	24.0	100.260	0.0	0.0	0.0	0.0

	FIXED END MOMENTS FEF	FEF
9.10	-0.0252	0.0018
9.20	-0.0415	0.0065
9.30	-0.0497	0.0133
9.40	-0.0510	0.0210
9.50	-0.0464	0.0286
9.60	-0.0375	0.0345
9.70	-0.0260	0.0370
9.80	-0.0140	0.0340
9.90	-0.0042	0.0228

STIFFNESS KFF= 3.2863 KFF= 2.0239

CARRY OVERS CFF= 0.3856 CFF= 0.6261

SAMPLE PROBLEM FOR REINFORCED CONCRETE BOX GIRDER 585770 DXC4DES

STIFFNESS AND CARRYOVER FACTORS AS USED IN MATRIX INVERSION

SPAN NO.	STIFFNESS	CARRYOVERS	STIFFNESS
1	KAC=0.315248E 01	CAC=0.537346E 00	KCA=0.315958E 01
2	KCE=0.201032E 01	CCE=0.535901E 00	KEC=0.201369E 01
3	KEG=0.346909E 01	CEG=0.537409E 00	KGE=0.347482E 01
4	KGI=0.100000E-09	CGI=0.100000E 01	KIG=0.100000E-09
5	KIK=0.100000E-09	CIK=0.100000E 01	KKI=0.100000E-09
6	KKM=0.100000E-09	CKM=0.100000E 01	KMK=0.100000E-09
7	KAB=0.100000E-09	CAB=0.100000E 01	KBA=0.100000E-09
8	KCD=0.199164E 01	CCD=0.312070E 00	KDC=0.100000E 11
9	KEF=0.328633E 01	CEF=0.385617E 00	KFE=0.100000E 11
10	KGH=0.100000E-09	CGH=0.100000E 01	KHG=0.100000E-09
11	KIJ=0.100000E-09	CIJ=0.100000E 01	KJI=0.100000E-09
12	KKL=0.100000E-09	CKL=0.100000E 01	KLK=0.100000E-09
13	KMN=0.100000E-09	CMN=0.100000E 01	KNM=0.100000E-09
14	KBD=0.100000E-09	CBD=0.100000E 01	KDB=0.100000E 11
15	KDF=0.100000E 11	CDF=0.100000E-04	KFD=0.100000E 11
16	KFH=0.100000E 11	CFH=0.100000E-04	KHF=0.100000E-09
17	KHJ=0.100000E-09	CHJ=0.100000E 01	KJH=0.100000E-09
18	KJL=0.100000E-09	CJL=0.100000E 01	KLJ=0.100000E-09
19	KLN=0.100000E-09	CLN=0.100000E 01	KNL=0.100000E-09

SAMPLE PROBLEM FOR REINFORCED CONCRETE BOX GIRDER 585770 DXC4DES

2 4 1CT

CELL 3 ANALYSIS

```
MAC=+ 0.0000FAC+ 0.5000FBA+-0.0000FCA+-0.0000FCE+-0.0000FDB+-0.0000FDC+ 0.0000FEC+ 0.0000FEG+ 0.0000FFD+
    + 0.0000FFE+-0.0000FGE+-0.0000FHG+-1.0000FAB+ 0.5000FBD+-0.0000FCD+-0.0000FDE+ 0.0000FEF+ 0.0000FFH+
    +-0.0000FGH+-0.0000FHF+ 0.0        0.0        0.0        0.0        0.0        0.0        0.0
MBA=+-0.0000FAC+ 0.5000FBA+ 0.0000FCA+ 0.0000FCE+ 0.0000FDB+ 0.0000FDC+-0.0000FEC+-0.0000FEG+-0.0000FFD+
    +-0.0000FFE+ 0.0000FGE+ 0.0000FHG+-0.0000FAB+-0.5000FBD+ 0.0000FCD+ 0.0000FDE+-0.0000FEF+-0.0000FFH+
    + 0.0000FGH+ 0.0000FHF+ 0.0        0.0        0.0        0.0        0.0        0.0        0.0
MCA=+-0.3393FAC+ 0.1696FBA+ 0.6314FCA+-0.3686FCE+ 0.0000FDB+ 0.0000FDC+ 0.0511FEC+ 0.0511FEG+ 0.0000FFD+
    + 0.0000FFE+-0.0274FGE+-0.0000FHG+-0.3393FAB+ 0.1696FBD+-0.3686FCD+ 0.0000FDE+ 0.0511FEF+ 0.0000FFH+
    +-0.0274FGH+-0.0000FHF+ 0.0        0.0        0.0        0.0        0.0        0.0        0.0
MCE=+ 0.1639FAC+-0.0819FBA+-0.3050FCA+ 0.6950FCE+ 0.0000FDB+ 0.0000FDC+-0.0964FEC+-0.0964FEG+-0.0000FFD+
    +-0.0000FFE+ 0.0517FGE+ 0.0000FHG+ 0.1639FAB+-0.0819FBD+-0.3050FCD+ 0.0000FDE+-0.0964FEF+-0.0000FFH+
    + 0.0517FGH+ 0.0000FHF+ 0.0        0.0        0.0        0.0        0.0        0.0        0.0
MDB=+-0.0182FAC+-0.3242FBA+ 0.0340FCA+ 0.0340FCE+ 0.6667FDB+-0.3333FDC+-0.0047FEC+-0.0047FEG+-0.0000FFD+
    +-0.0000FFE+ 0.0025FGE+ 0.3333FHG+-0.0182FAB+-0.3242FBD+ 0.0340FCD+-0.3333FDE+-0.0047FEF+-0.0000FFH+
    + 0.0025FGH+ 0.3333FHF+ 0.0        0.0        0.0        0.0        0.0        0.0        0.0
MDC=+ 0.0365FAC+ 0.1484FBA+-0.0679FCA+-0.0679FCE+-0.3333FDB+ 1.0000FDC+ 0.0094FEC+ 0.0094FEG+-0.0000FFD+
    +-0.0000FFE+-0.0051FGE+ 0.3333FHG+ 0.0365FAB+ 0.1484FBD+-0.0679FCD+-0.3333FDE+ 0.0094FEF+-0.0000FFH+
    +-0.0051FGH+ 0.3333FHF+ 0.0        0.0        0.0        0.0        0.0        0.0        0.0
MEC=+ 0.0703FAC+-0.0351FBA+-0.1308FCA+-0.1308FCE+ 0.0000FDB+ 0.0000FDC+ 0.7589FEC+-0.2411FEG+-0.0000FFD
    +-0.0000FFE+ 0.1293FGE+ 0.0000FHG+ 0.0703FAB+-0.0351FBD+-0.1308FCD+ 0.0000FDE+-0.2411FEF+-0.0000FFH
    + 0.1293FGH+ 0.0000FHF+ 0.0        0.0        0.0        0.0        0.0        0.0        0.0
MEG=+-0.0301FAC+ 0.0151FBA+ 0.0561FCA+ 0.0561FCE+-0.0000FDB+-0.0000FDC+-0.3256FEC+ 0.6744FEG+ 0.0000FFD
    + 0.0000FFE+-0.3618FGE+ 0.0000FHG+-0.0301FAB+ 0.0151FBD+ 0.0561FCD+-0.0000FDE+-0.3256FEF+ 0.0000FFH
    +-0.3618FGH+ 0.0000FHF+ 0.0        0.0        0.0        0.0        0.0        0.0        0.0
MED=+-0.0000FAC+ 0.0000FBA+ 0.0000FCA+ 0.0000FCE+-0.0000FDB+-0.0000FDC+-0.0000FEC+-0.0000FEG+ 1.0000FFD
    + 0.0000FFE+ 0.0000FGE+*******FHG+-0.0000FAB+ 0.0000FBD+ 0.0000FCD+-0.0000FDE+-0.0000FEF+ 0.0000FFH
    + 0.0000FGH+*******FHF+ 0.0        0.0        0.0        0.0        0.0        0.0        0.0
MEF=+-0.0155FAC+ 0.0077FBA+ 0.0288FCA+ 0.0288FCE+-0.0000FDB+-0.0000FDC+-0.1671FEC+-0.1671FEG+ 0.0000FFD
    + 1.0000FFE+ 0.0897FGE+*******FHG+-0.0155FAB+ 0.0077FBD+ 0.0288FCD+-0.0000FDE+-0.1671FEF+ 0.0000FFH
    + 0.0897FGH+*******FHF+ 0.0        0.0        0.0        0.0        0.0        0.0        0.0
```

SAMPLE PROBLEM FOR REINFORCED CONCRETE BOX GIRDER 585770 DXC4DES

2 4 1CT

CELL 3 ANALYSIS

```
MGE=+-0.0000EAC+ 0.0000EBA+ 0.0000ECA+ 0.0000ECE+-0.0000EDB+-0.0000EDC+-0.0000EEC+-0.0000EEG+ 0.0000EED+
    + 0.0000EEE+ 0.0000EGE+-0.0000EHG+-0.0000EAB+ 0.0000EBD+ 0.0000ECD+-0.0000EDE+-0.0000EEE+ 0.0000EEH+
    +-1.0000EGH+-0.0000EHE+ 0.0        0.0        0.0        0.0        0.0        0.0        0.0
MHG=+ 0.0000EAC+-0.0000EBA+-0.0000ECA+-0.0000ECE+ 0.0000EDB+ 0.0000EDC+ 0.0000EEC+ 0.0000EEG+-0.0000EED+
    +-0.0000EEE+-0.0000EGE+ 1.0000EHG+ 0.0000EAB+-0.0000EBD+-0.0000ECD+ 0.0000EDE+ 0.0000EEE+-0.0000EEH+
    +-0.0000EGH+ 0.0000EHE+ 0.0        0.0        0.0        0.0        0.0        0.0        0.0
```

WYOMING HIGHWAY DEPARTMENT
BRIDGE DESIGN DIVISION
SAMPLE PROBLEM FOR REINFORCED CONCRETE BOX GIRDER 585770 DXC4DES

INFLUENCE LINES

LOAD POINTS	V 1.0R	M 1.0R	M 1.1	M 1.2	M 1.3	M 1.4	M 1.5
1.1	0.866332	-0.000000	0.086633	0.073266	0.059900	0.046533	0.033166
1.2	0.734429	-0.000000	0.073443	0.146886	0.120329	0.093772	0.067214
1.3	0.606594	-0.000000	0.060659	0.121319	0.181978	0.142637	0.103297
1.4	0.485046	-0.000000	0.048505	0.097009	0.145514	0.194018	0.142523
1.5	0.371879	-0.000000	0.037188	0.074376	0.111564	0.148751	0.185939
1.6	0.269186	-0.000000	0.026919	0.053837	0.080756	0.107674	0.134593
1.7	0.179064	-0.000000	0.017906	0.035813	0.053719	0.071626	0.089532
1.8	0.103608	-0.000000	0.010361	0.020721	0.031082	0.041443	0.051804
1.9	0.044178	-0.000000	0.004418	0.008836	0.013253	0.017671	0.022089
2.1	-0.048937	0.000000	-0.004894	-0.009787	-0.014681	-0.019575	-0.024468
2.2	-0.080575	0.000000	-0.008058	-0.016115	-0.024173	-0.032230	-0.040288
2.3	-0.095337	0.000000	-0.009534	-0.019067	-0.028601	-0.038135	-0.047668
2.4	-0.096028	0.000000	-0.009603	-0.019206	-0.028808	-0.038411	-0.048014
2.5	-0.086167	0.000000	-0.008617	-0.017233	-0.025850	-0.034467	-0.043084
2.6	-0.069274	0.000000	-0.006927	-0.013855	-0.020782	-0.027709	-0.034637
2.7	-0.048866	0.000000	-0.004887	-0.009773	-0.014660	-0.019547	-0.024433
2.8	-0.028464	0.000000	-0.002846	-0.005693	-0.008539	-0.011385	-0.014232
2.9	-0.011389	0.000000	-0.001139	-0.002278	-0.003417	-0.004556	-0.005694
3.1	0.004113	-0.000000	0.000411	0.000823	0.001234	0.001645	0.002057
3.2	0.007100	-0.000000	0.000710	0.001420	0.002130	0.002840	0.003550
3.3	0.008905	-0.000000	0.000890	0.001781	0.002671	0.003562	0.004452
3.4	0.009631	-0.000000	0.000963	0.001926	0.002889	0.003852	0.004815
3.5	0.009431	-0.000000	0.000943	0.001886	0.002829	0.003773	0.004716
3.6	0.008461	-0.000000	0.000846	0.001692	0.002538	0.003384	0.004231
3.7	0.006874	-0.000000	0.000687	0.001375	0.002062	0.002750	0.003437
3.8	0.004825	-0.000000	0.000482	0.000965	0.001447	0.001930	0.002412
3.9	0.002477	-0.000000	0.000248	0.000495	0.000743	0.000991	0.001238
AREA 1=	0.416031	-0.000000	0.036603	0.063206	0.079809	0.086413	0.083016
AREA 2=	-0.088146	0.000000	-0.008815	-0.017629	-0.026444	-0.035258	-0.044073
AREA 3=	0.005625	-0.000000	0.000563	0.001125	0.001688	0.002250	0.002813

WYOMING HIGHWAY DEPARTMENT
BRIDGE DESIGN DIVISION

DATE
PAGE NO. 11

SAMPLE PROBLEM FOR REINFORCED CONCRETE BOX GIRDER 585770 DXC4DES

INFLUENCE LINES

LOAD POINTS	V 1.0R	M 1.0R	M 1.1	M 1.2	M 1.3	M 1.4	M 1.5
8.1	-0.013636	0.000000	-0.001364	-0.002727	-0.004091	-0.005454	-0.006818
8.2	-0.023000	0.000000	-0.002300	-0.004600	-0.006900	-0.009200	-0.011500
8.3	-0.028342	0.000000	-0.002834	-0.005668	-0.008503	-0.011337	-0.014171
8.4	-0.029975	0.000000	-0.002997	-0.005995	-0.008992	-0.011990	-0.014987
8.5	-0.028297	0.000000	-0.002830	-0.005659	-0.008489	-0.011319	-0.014148
8.6	-0.023839	0.000000	-0.002384	-0.004768	-0.007152	-0.009536	-0.011920
8.7	-0.017299	0.000000	-0.001730	-0.003460	-0.005190	-0.006919	-0.008649
8.8	-0.009547	0.000000	-0.000955	-0.001909	-0.002864	-0.003819	-0.004774
8.9	-0.002852	0.000000	-0.000285	-0.000570	-0.000855	-0.001141	-0.001426
9.1	0.001290	-0.000000	0.000129	0.000258	0.000387	0.000516	0.000645
9.2	0.002122	-0.000000	0.000212	0.000424	0.000637	0.000849	0.001061
9.3	0.002543	-0.000000	0.000254	0.000509	0.000763	0.001017	0.001271
9.4	0.002605	-0.000000	0.000260	0.000521	0.000781	0.001042	0.001302
9.5	0.002372	-0.000000	0.000237	0.000474	0.000711	0.000949	0.001186
9.6	0.001916	-0.000000	0.000192	0.000383	0.000575	0.000767	0.000958
9.7	0.001328	-0.000000	0.000133	0.000266	0.000399	0.000531	0.000664
9.8	0.000715	-0.000000	0.000072	0.000143	0.000215	0.000286	0.000358
9.9	0.000214	-0.000000	0.000021	0.000043	0.000064	0.000086	0.000107
AREA 8=	-0.007602	0.000000	-0.000760	-0.001520	-0.002281	-0.003041	-0.003801
AREA 9=	0.000453	-0.000000	0.000045	0.000091	0.000136	0.000181	0.000227
SUM - =	-0.095748	-0.000000	-0.009575	-0.019149	-0.028724	-0.038299	-0.047874
SUM + =	0.422110	0.000000	0.037211	0.064422	0.081633	0.088844	0.086055
SUM TOT	0.326362	-0.000000	0.027636	0.045272	0.052909	0.050545	0.038181

WYOMING HIGHWAY DEPARTMENT
BRIDGE DESIGN DIVISION
SAMPLE PROBLEM FOR REINFORCED CONCRETE BOX GIRDER 585770 DXC4DES

DATE
PAGE NO. 12

INFLUENCE LINES

LOAD POINTS	M 1.6	M 1.7	M 1.8	M 1.9	M 2.0L	V 2.0L	R 2.0
1.1	0.013799	0.006433	-0.006934	-0.020301	-0.033668	-0.133668	0.148563
1.2	0.040657	0.014100	-0.012457	-0.039014	-0.065571	-0.265571	0.294582
1.3	0.063956	0.024616	-0.014725	-0.054066	-0.093406	-0.393406	0.434732
1.4	0.091029	0.039532	-0.011963	-0.063459	-0.114954	-0.514954	0.565813
1.5	0.123127	0.060315	-0.002497	-0.065309	-0.128122	-0.628121	0.684807
1.6	0.161512	0.086430	0.015349	-0.057733	-0.130814	-0.730814	0.788690
1.7	0.107439	0.125345	0.043251	-0.038842	-0.120936	-0.820936	0.874442
1.8	0.062164	0.072525	0.082886	-0.006753	-0.096393	-0.896392	0.939040
1.9	0.026507	0.030925	0.035343	0.039760	-0.055822	-0.955822	0.980519
2.1	-0.029362	-0.034256	-0.039149	-0.044043	-0.048937	-0.048937	0.990892
2.2	-0.048345	-0.056403	-0.064460	-0.072518	-0.080575	-0.080575	0.936859
2.3	-0.057202	-0.066736	-0.076269	-0.085803	-0.095337	-0.095337	0.841939
2.4	-0.057617	-0.067220	-0.076823	-0.086425	-0.096028	-0.096028	0.716588
2.5	-0.051700	-0.060317	-0.068934	-0.077551	-0.086167	-0.086167	0.573041
2.6	-0.041564	-0.048491	-0.055419	-0.062346	-0.069274	-0.069274	0.423543
2.7	0.029320	-0.034206	-0.039093	-0.043980	-0.048866	-0.048866	0.280336
2.8	-0.017078	-0.019925	-0.022771	-0.025617	-0.028464	-0.028464	0.155658
2.9	-0.006833	-0.007972	-0.009111	-0.010250	-0.011389	-0.011389	0.060349
3.1	0.002468	0.002879	0.003290	0.003702	0.004113	0.004113	-0.021518
3.2	0.004260	0.004970	0.005680	0.006390	0.007100	0.007100	-0.037144
3.3	0.005343	0.006233	0.007124	0.008014	0.008905	0.008905	-0.046586
3.4	0.005778	0.006741	0.007705	0.008668	0.009631	0.009631	-0.050383
3.5	0.005659	0.006602	0.007545	0.008488	0.009431	0.009431	-0.049340
3.6	0.005077	0.005923	0.006769	0.007615	0.008461	0.008461	-0.044264
3.7	0.004124	0.004812	0.005499	0.006187	0.006874	0.006874	-0.035962
3.8	0.002895	0.003377	0.003860	0.004342	0.004825	0.004825	-0.025240
3.9	0.001486	0.001734	0.001981	0.002229	0.002477	0.002477	-0.012958
AREA 1=	0.059619	0.046222	0.012825	-0.030572	-0.083969	-0.583968	0.621118
AREA 2=	-0.052887	-0.061702	-0.070517	-0.079331	-0.088146	-0.088146	0.854755
AREA 3=	0.003375	0.003938	0.004500	0.005063	0.005625	0.005625	-0.029429

WYOMING HIGHWAY DEPARTMENT
BRIDGE DESIGN DIVISION

DATE
PAGE NO. 13

SAMPLE PROBLEM FOR REINFORCED CONCRETE BOX GIRDER 585770 DXC4DES

INFLUENCE LINES

LOAD POINTS	M 1.6	M 1.7	M 1.8	M 1.9	M 2.0L	V 2.0L	R 2.0
8.1	-0.008181	-0.009545	-0.010909	-0.012272	-0.013636	-0.013636	0.003303
8.2	-0.013800	-0.016100	-0.018400	-0.020700	-0.023000	-0.023000	0.005571
8.3	-0.017005	-0.019840	-0.022674	-0.025508	-0.028342	-0.028342	0.006865
8.4	-0.017985	-0.020982	-0.023980	-0.026977	-0.029975	-0.029975	0.007261
8.5	-0.016978	-0.019808	-0.022637	-0.025467	-0.028297	-0.028297	0.006854
8.6	-0.014304	-0.016688	-0.019071	-0.021455	-0.023839	-0.023839	0.005774
8.7	-0.010379	-0.012109	-0.013839	-0.015569	-0.017299	-0.017299	0.004190
8.8	-0.005728	-0.006683	-0.007638	-0.008593	-0.009547	-0.009547	0.002313
8.9	-0.001711	-0.001996	-0.002281	-0.002566	-0.002852	-0.002852	0.000691
9.1	0.000774	0.000903	0.001032	0.001161	0.001290	0.001290	-0.006749
9.2	0.001273	0.001486	0.001698	0.001910	0.002122	0.002122	-0.011102
9.3	0.001526	0.001780	0.002034	0.002288	0.002543	0.002543	-0.013302
9.4	0.001563	0.001823	0.002084	0.002344	0.002605	0.002605	-0.013628
9.5	0.001423	0.001660	0.001897	0.002134	0.002372	0.002372	-0.012407
9.6	0.001150	0.001341	0.001533	0.001725	0.001916	0.001916	-0.010025
9.7	0.000797	0.000930	0.001062	0.001195	0.001328	0.001328	-0.006947
9.8	0.000429	0.000501	0.000572	0.000644	0.000715	0.000715	-0.003741
9.9	0.000129	0.000150	0.000171	0.000192	0.000214	0.000214	-0.001119
AREA 8=	-0.004561	-0.005321	-0.006081	-0.006842	-0.007602	-0.007602	0.001841
AREA 9=	0.000272	0.000317	0.000363	0.000408	0.000453	0.000453	-0.002371
SUM - =	-0.057448	-0.067023	-0.081348	-0.120432	-0.179716	-0.679716	-0.031799
SUM + =	0.073266	0.050477	0.022438	0.009158	0.006078	0.006078	1.477714
SUM TOT	0.015817	-0.016546	-0.058910	-0.111274	-0.173638	-0.673637	1.445913

WYOMING HIGHWAY DEPARTMENT
BRIDGE DESIGN DIVISION
SAMPLE PROBLEM FOR REINFORCED CONCRETE BOX GIRDER 585770 DXC4DES

DATE
PAGE NO. 14

INFLUENCE LINES

LOAD POINTS	V 2.0R	M 2.0R	M 2.1	M 2.2	M 2.3	M 2.4	M 2.5
1.1	0.014896	-0.016263	-0.013939	-0.011615	-0.009291	-0.006968	-0.004644
1.2	0.029011	-0.031673	-0.027148	-0.022622	-0.018096	-0.013571	-0.009045
1.3	0.041326	-0.045119	-0.038672	-0.032225	-0.025778	-0.019331	-0.012884
1.4	0.050859	-0.055527	-0.047593	-0.039659	-0.031725	-0.023791	-0.015857
1.5	0.056685	-0.061887	-0.053044	-0.044202	-0.035359	-0.026516	-0.017673
1.6	0.057876	-0.063188	-0.054159	-0.045130	-0.036102	-0.027073	-0.018044
1.7	0.053506	-0.058416	-0.050069	-0.041723	-0.033376	-0.025029	-0.016682
1.8	0.042647	-0.046561	-0.039908	-0.033255	-0.026602	-0.019949	-0.013296
1.9	0.024697	-0.026964	-0.023111	-0.019258	-0.015406	-0.011553	-0.007700
2.1	0.941955	-0.092267	0.054678	0.045623	0.036568	0.027513	0.018458
2.2	0.856284	-0.151920	-0.018340	0.115241	0.092821	0.070401	0.047982
2.3	0.746603	-0.179751	-0.063282	0.053188	0.169658	0.130128	0.090598
2.4	0.620559	-0.181055	-0.084248	0.012559	0.109366	0.206174	0.146981
2.5	0.486874	-0.162463	-0.086511	-0.010558	0.065394	0.141346	0.217298
2.6	0.354269	-0.130611	-0.075345	-0.020079	0.035187	0.090453	0.145719
2.7	0.231470	-0.092134	-0.056025	-0.019916	0.016193	0.052303	0.088412
2.8	0.127195	-0.053666	-0.033824	-0.013982	0.005861	0.025703	0.045545
2.9	0.048960	-0.021473	-0.013835	-0.006198	0.001440	0.009078	0.016716
3.1	-0.017405	0.007755	0.005040	0.002325	-0.000390	-0.003105	-0.005821
3.2	-0.030044	0.013387	0.008700	0.004013	-0.000674	-0.005361	-0.010047
3.3	-0.037681	0.016790	0.010911	0.005033	-0.000845	-0.006723	-0.012602
3.4	-0.040752	0.018158	0.011801	0.005443	-0.000914	-0.007271	-0.013629
3.5	-0.039909	0.017782	0.011556	0.005331	-0.000895	-0.007121	-0.013347
3.6	-0.035803	0.015953	0.010368	0.004782	-0.000803	-0.006388	-0.011974
3.7	-0.029088	0.012961	0.008423	0.003885	-0.000652	-0.005190	-0.009728
3.8	-0.020416	0.009097	0.005912	0.002727	-0.000458	-0.003643	-0.006828
3.9	-0.010481	0.004670	0.003035	0.001400	-0.000235	-0.001870	-0.003505
AREA 1=	0.037150	-0.040560	-0.034764	-0.028969	-0.023173	-0.017378	-0.011583
AREA 2=	0.766609	-0.166193	-0.058770	0.024317	0.083068	0.117483	0.127562
AREA 3=	-0.023804	0.010606	0.006893	0.003179	-0.000534	-0.004247	-0.007961

WYOMING HIGHWAY DEPARTMENT
BRIDGE DESIGN DIVISION
SAMPLE PROBLEM FOR REINFORCED CONCRETE BOX GIRDER

DATE
PAGE NO. 15
585770 DXC4DES

INFLUENCE LINES

LOAD POINTS	V 2.0R	M 2.0R	M 2.1	M 2.2	M 2.3	M 2.4	M 2.5
8.1	-0.010333	0.011281	0.009669	0.008057	0.006445	0.004833	0.003222
8.2	-0.017429	0.019028	0.016309	0.013590	0.010872	0.008153	0.005434
8.3	-0.021477	0.023448	0.020098	0.016747	0.013397	0.010046	0.006696
8.4	-0.022714	0.024799	0.021255	0.017712	0.014169	0.010625	0.007082
8.5	-0.021443	0.023411	0.020065	0.016720	0.013375	0.010030	0.006685
8.6	-0.018065	0.019723	0.016905	0.014087	0.011268	0.008450	0.005632
8.7	-0.013108	0.014311	0.012267	0.010222	0.008177	0.006132	0.004087
8.8	-0.007235	0.007899	0.006770	0.005641	0.004513	0.003384	0.002256
8.9	-0.002161	0.002359	0.002022	0.001685	0.001348	0.001011	0.000674
9.1	-0.005459	0.002432	0.001581	0.000729	-0.000122	-0.000974	-0.001826
9.2	-0.008980	0.004001	0.002600	0.001199	-0.000201	-0.001602	-0.003003
9.3	-0.010759	0.004794	0.003116	0.001437	-0.000241	-0.001920	-0.003598
9.4	-0.011023	0.004912	0.003192	0.001472	-0.000247	-0.001967	-0.003686
9.5	-0.010035	0.004471	0.002906	0.001340	-0.000225	-0.001791	-0.003356
9.6	-0.008109	0.003613	0.002348	0.001083	-0.000182	-0.001447	-0.002712
9.7	-0.005619	0.002504	0.001627	0.000751	-0.000126	-0.001003	-0.001879
9.8	-0.003026	0.001348	0.000876	0.000404	-0.000068	-0.000540	-0.001012
9.9	-0.000905	0.000403	0.000262	0.000121	-0.000020	-0.000161	-0.000303
AREA 8=	-0.005760	0.006289	0.005390	0.004492	0.003593	0.002695	0.001796
AREA 9=	-0.001917	0.000854	0.000555	0.000256	-0.000043	-0.000342	-0.000641
SUM - =	-0.031481	-0.206753	-0.100993	-0.039556	-0.023750	-0.021967	-0.020184
SUM + =	0.803759	0.017750	0.020297	0.042831	0.086661	0.120178	0.129358
SUM TOT	0.772278	-0.189003	-0.080696	0.003276	0.062911	0.098210	0.109174

WYOMING HIGHWAY DEPARTMENT
BRIDGE DESIGN DIVISION

DATE
PAGE NO. 16

SAMPLE PROBLEM FOR REINFORCED CONCRETE BOX GIRDER 585770 DXC4DES

INFLUENCE LINES

LOAD POINTS	M 2.6	M 2.7	M 2.8	M 2.9	M 3.0L	V 3.0L	R 3.0
1.1	-0.002320	0.000003	0.002327	0.004651	0.006974	0.014896	-0.018183
1.2	-0.004519	0.000007	0.004532	0.009058	0.013584	0.029011	-0.035414
1.3	-0.006438	0.000009	0.006456	0.012903	0.019350	0.041326	-0.050447
1.4	-0.007923	0.000011	0.007945	0.015879	0.023814	0.050859	-0.062085
1.5	-0.008830	0.000013	0.008856	0.017698	0.026541	0.056685	-0.069197
1.6	-0.009016	0.000013	0.009042	0.018070	0.027099	0.057876	-0.070651
1.7	-0.008335	0.000012	0.008359	0.016706	0.025053	0.053506	-0.065316
1.8	-0.006643	0.000010	0.006663	0.013315	0.019969	0.042647	-0.052060
1.9	-0.003847	0.000006	0.003858	0.007711	0.011564	0.024697	-0.030149
2.1	0.009403	0.000348	-0.008708	-0.017763	-0.026818	-0.058045	0.070687
2.2	0.025562	0.003142	-0.019278	-0.041697	-0.064117	-0.143716	0.173941
2.3	0.051068	0.011538	-0.027992	-0.067522	-0.107052	-0.253397	0.303862
2.4	0.087788	0.028596	-0.030597	-0.089790	-0.148383	-0.379441	0.449672
2.5	0.137251	0.057203	-0.022845	-0.102892	-0.182940	-0.513126	0.599365
2.6	0.200985	0.100251	-0.000483	-0.101217	-0.201951	-0.645731	0.740931
2.7	0.124521	0.160630	0.040740	-0.079151	-0.199042	-0.768530	0.862359
2.8	0.065389	0.085230	0.105072	-0.031085	-0.167243	-0.872805	0.951644
2.9	0.024354	0.031992	0.039629	0.047267	-0.101095	-0.951040	0.998696
3.1	-0.008536	-0.011251	-0.013966	-0.016681	-0.019396	-0.017405	0.977037
3.2	-0.014734	-0.019421	-0.024108	-0.028795	-0.033482	-0.030044	0.932981
3.3	-0.018480	-0.024358	-0.030236	-0.036115	-0.041993	-0.037681	0.866787
3.4	-0.019986	-0.026343	-0.032701	-0.039058	-0.045415	-0.040752	0.780380
3.5	-0.019572	-0.025798	-0.032024	-0.038250	-0.044475	-0.039909	0.676646
3.6	-0.017559	-0.023144	-0.028729	-0.034315	-0.039900	-0.035803	0.558474
3.7	-0.014266	-0.018803	-0.023341	-0.027879	-0.032417	-0.029088	0.428752
3.8	-0.010012	-0.013197	-0.016382	-0.019567	-0.022752	-0.020416	0.290366
3.9	-0.005140	-0.006775	-0.008410	-0.010045	-0.011680	-0.010481	0.146391
AREA 1=	-0.005787	0.000008	0.005804	0.011599	0.017395	0.037150	-0.045350
AREA 2=	0.113306	0.074713	0.011784	-0.075480	-0.187081	-0.793389	0.881580
AREA 3=	-0.011674	-0.015387	-0.019101	-0.022814	-0.026527	-0.023804	0.560361

WYOMING HIGHWAY DEPARTMENT
BRIDGE DESIGN DIVISION
SAMPLE PROBLEM FOR REINFORCED CONCRETE BOX GIRDER 585770 DXC4DES

DATE
PAGE NO. 17

INFLUENCE LINES

LOAD POINTS	M 2.6	M 2.7	M 2.8	M 2.9	M 3.0L	V 3.0L	R 3.0
8.1	0.001610	-0.000002	-0.001614	-0.003226	-0.004838	-0.010333	0.012613
8.2	0.002715	-0.000004	-0.002723	-0.005442	-0.008161	-0.017429	0.021276
8.3	0.003346	-0.000005	-0.003355	-0.006706	-0.010056	-0.021477	0.026218
8.4	0.003538	-0.000005	-0.003549	-0.007092	-0.010635	-0.022714	0.027728
8.5	0.003340	-0.000005	-0.003350	-0.006695	-0.010040	-0.021443	0.026176
8.6	0.002814	-0.000004	-0.002822	-0.005640	-0.008458	-0.018065	0.022052
8.7	0.002042	-0.000003	-0.002048	-0.004093	-0.006138	-0.013108	0.016002
8.8	0.001127	-0.000002	-0.001130	-0.002259	-0.003387	-0.007235	0.008832
8.9	0.000337	-0.000000	-0.000338	-0.000675	-0.001012	-0.002161	0.002638
9.1	-0.002677	-0.003529	-0.004380	-0.005232	-0.006083	-0.005459	-0.003570
9.2	-0.004404	-0.005805	-0.007206	-0.008607	-0.010007	-0.008980	-0.005872
9.3	-0.005277	-0.006955	-0.008633	-0.010312	-0.011990	-0.010759	-0.007036
9.4	-0.005406	-0.007126	-0.008845	-0.010565	-0.012284	-0.011023	-0.007209
9.5	-0.005322	-0.006487	-0.008053	-0.009618	-0.011184	-0.010035	-0.006563
9.6	-0.003977	-0.005242	-0.006507	-0.007772	-0.009037	-0.008109	-0.005303
9.7	-0.002756	-0.003632	-0.004509	-0.005386	-0.006262	-0.005619	-0.003675
9.8	-0.001484	-0.001956	-0.002428	-0.002900	-0.003372	-0.003026	-0.001979
9.9	-0.000444	-0.000585	-0.000726	-0.000867	-0.001009	-0.000905	-0.000592
AREA 8=	0.000897	-0.000001	-0.000900	-0.001799	-0.002697	-0.005760	0.007032
AREA 9=	-0.000940	-0.001239	-0.001539	-0.001838	-0.002137	-0.001917	-0.001254
SUM - =	-0.018401	-0.016629	-0.038647	-0.107842	-0.213443	-0.824870	-0.046604
SUM + =	0.114203	0.074721	0.034695	0.017510	0.017395	0.037150	1.448972
SUM TOT	0.095801	0.058093	-0.003951	-0.090331	-0.201048	-0.787720	1.402368

WYOMING HIGHWAY DEPARTMENT
BRIDGE DESIGN DIVISION

DATE
PAGE NO. 18

SAMPLE PROBLEM FOR REINFORCED CONCRETE BOX GIRDER

585770 DXC4DES

INFLUENCE LINES

LOAD POINTS	V 3.0R	M 3.0R	M 3.1	M 3.2	M 3.3	M 3.4	M 3.5
1.1	-0.003288	0.002992	0.002693	0.002394	0.002094	0.001795	0.001496
1.2	-0.006403	0.005827	0.005244	0.004662	0.004079	0.003496	0.002914
1.3	-0.009122	0.008301	0.007471	0.006641	0.005810	0.004980	0.004150
1.4	-0.011226	0.010216	0.009194	0.008172	0.007151	0.006129	0.005108
1.5	-0.012512	0.011386	0.010247	0.009109	0.007970	0.006831	0.005693
1.6	-0.012775	0.011625	0.010462	0.009300	0.008137	0.006975	0.005812
1.7	-0.011810	0.010747	0.009672	0.008598	0.007523	0.006448	0.005374
1.8	-0.009413	0.008566	0.007709	0.006853	0.005996	0.005140	0.004283
1.9	-0.005451	0.004961	0.004465	0.003969	0.003472	0.002976	0.002480
2.1	0.012642	-0.011504	-0.010354	-0.009203	-0.008053	-0.006902	-0.005752
2.2	0.030225	-0.027505	-0.024754	-0.022004	-0.019253	-0.016503	-0.013752
2.3	0.050465	-0.045923	-0.041330	-0.036738	-0.032146	-0.027554	-0.022961
2.4	0.070231	-0.063910	-0.057519	-0.051128	-0.044737	-0.038346	-0.031955
2.5	0.086239	-0.078477	-0.070629	-0.062782	-0.054934	-0.047086	-0.039239
2.6	0.095200	-0.086632	-0.077969	-0.069306	-0.060643	-0.051979	-0.043316
2.7	0.093829	-0.085384	-0.076846	-0.068308	-0.059769	-0.051231	-0.042692
2.8	0.078839	-0.071744	-0.064569	-0.057395	-0.050221	-0.043046	-0.035872
2.9	0.047657	-0.043368	-0.039031	-0.034694	-0.030357	-0.026021	-0.021684
3.1	0.959633	-0.054266	0.033061	0.029387	0.025714	0.022040	0.018367
3.2	0.902938	-0.093673	-0.011506	0.070661	0.061828	0.052996	0.044163
3.3	0.829106	-0.117486	-0.042038	0.033411	0.108859	0.093308	0.077757
3.4	0.739628	-0.127061	-0.059755	0.007551	0.074857	0.142163	0.118469
3.5	0.636737	-0.124431	-0.066488	-0.008545	0.049398	0.107341	0.165284
3.6	0.522671	-0.111630	-0.064067	-0.016504	0.031059	0.078622	0.126185
3.7	0.399664	-0.090694	-0.054324	-0.017955	0.018414	0.054784	0.091153
3.8	0.269950	-0.063654	-0.039089	-0.014523	0.010042	0.034607	0.059173
3.9	0.135911	-0.032678	-0.020310	-0.007943	0.004425	0.016793	0.029161
AREA 1=	-0.008200	0.007462	0.006716	0.005970	0.005223	0.004477	0.003731
AREA 2=	0.088191	-0.080254	-0.072228	-0.064203	-0.056178	-0.048152	-0.040127
AREA 3=	0.536557	-0.074217	-0.029531	0.006874	0.034998	0.054842	0.066404

WYOMING HIGHWAY DEPARTMENT
BRIDGE DESIGN DIVISION
SAMPLE PROBLEM FOR REINFORCED CONCRETE BOX GIRDER 585770 DXC4DES

DATE
PAGE NO. 19

INFLUENCE LINES

LOAD POINTS	V 3.0R	M 3.0R	M 3.1	M 3.2	M 3.3	M 3.4	M 3.5
8.1	0.002281	-0.002075	-0.001868	-0.001660	-0.001453	-0.001245	-0.001038
8.2	0.003847	-0.003501	-0.003151	-0.002801	-0.002450	-0.002100	-0.001750
8.3	0.004741	-0.004314	-0.003882	-0.003451	-0.003020	-0.002588	-0.002157
8.4	0.005014	-0.004562	-0.004106	-0.003650	-0.003194	-0.002737	-0.002281
8.5	0.004733	-0.004307	-0.003876	-0.003446	-0.003015	-0.002584	-0.002153
8.6	0.003987	-0.003628	-0.003266	-0.002903	-0.002540	-0.002177	-0.001814
8.7	0.002893	-0.002633	-0.002370	-0.002106	-0.001843	-0.001580	-0.001316
8.8	0.001597	-0.001453	-0.001308	-0.001163	-0.001017	-0.000872	-0.000727
8.9	0.000477	-0.000434	-0.000391	-0.000347	-0.000304	-0.000260	-0.000217
9.1	-0.009029	0.008216	0.007394	0.006573	0.005751	0.004930	0.004108
9.2	-0.014852	0.013516	0.012164	0.010812	0.009461	0.008109	0.006758
9.3	-0.017795	0.016194	0.014574	0.012955	0.011336	0.009716	0.008097
9.4	-0.018231	0.016591	0.014932	0.013273	0.011613	0.009954	0.008295
9.5	-0.016598	0.015104	0.013594	0.012083	0.010573	0.009063	0.007552
9.6	-0.013412	0.012205	0.010984	0.009764	0.008543	0.007323	0.006102
9.7	-0.009294	0.008457	0.007612	0.006766	0.005920	0.005074	0.004229
9.8	-0.005004	0.004554	0.004099	0.003643	0.003188	0.002732	0.002277
9.9	-0.001497	0.001362	0.001226	0.001090	0.000954	0.000817	0.000681
AREA 8=	0.001271	-0.001157	-0.001041	-0.000926	-0.000810	-0.000694	-0.000579
AREA 9=	-0.003171	0.002886	0.002597	0.002309	0.002020	0.001732	0.001443
SUM - =	-0.011371	-0.155628	-0.105421	-0.070904	-0.056988	-0.048846	-0.040705
SUM + =	0.626019	0.010348	0.011933	0.020928	0.042242	0.061050	0.071578
SUM TOT	0.614648	-0.145280	-0.093487	-0.049976	-0.014746	0.012204	0.030872

INFLUENCE LINES

LOAD POINTS	M 3.6	M 3.7	M 3.8	M 3.9	M 4.0L	V 4.0L	R 4.0
1.1	0.001197	0.000898	0.000598	0.000299	-0.000000	-0.003288	0.003288
1.2	0.002331	0.001748	0.001165	0.000583	-0.000000	-0.006403	0.006403
1.3	0.003320	0.002490	0.001660	0.000830	-0.000000	-0.009122	0.009122
1.4	0.004086	0.003065	0.002043	0.001022	-0.000000	-0.011226	0.011226
1.5	0.004554	0.003416	0.002277	0.001139	-0.000000	-0.012512	0.012512
1.6	0.004650	0.003487	0.002325	0.001163	-0.000000	-0.012775	0.012775
1.7	0.004299	0.003224	0.002149	0.001075	-0.000000	-0.011810	0.011810
1.8	0.003426	0.002570	0.001713	0.000857	-0.000000	-0.009413	0.009413
1.9	0.001984	0.001488	0.000992	0.000496	-0.000000	-0.005451	0.005451
2.1	-0.004602	-0.003451	-0.002301	-0.001150	0.000000	0.012642	-0.012642
2.2	-0.011002	-0.008251	-0.005501	-0.002750	0.000000	0.030225	-0.030225
2.3	-0.018369	-0.013777	-0.009185	-0.004592	0.000000	0.050465	-0.050465
2.4	-0.025564	-0.019173	-0.012782	-0.006391	0.000000	0.070231	-0.070231
2.5	-0.031391	-0.023543	-0.015696	-0.007848	0.000000	0.086239	-0.086239
2.6	-0.034653	-0.025990	-0.017327	-0.008663	0.000000	0.095200	-0.095200
2.7	-0.034154	-0.025615	-0.017077	-0.008539	0.000000	0.093829	-0.093829
2.8	-0.028697	-0.021523	-0.014349	-0.007174	0.000000	0.078839	-0.078839
2.9	-0.017347	-0.013010	-0.008674	-0.004337	0.000000	0.047657	-0.047657
3.1	0.014694	0.011020	0.007347	0.003673	-0.000000	-0.040367	0.040367
3.2	0.035331	0.026498	0.017665	0.008833	-0.000000	-0.097062	0.097062
3.3	0.062205	0.046654	0.031103	0.015551	-0.000000	-0.170894	0.170894
3.4	0.094775	0.071082	0.047388	0.023694	-0.000000	-0.260372	0.260372
3.5	0.132229	0.099171	0.066114	0.033057	-0.000000	-0.363263	0.363263
3.6	0.173748	0.130311	0.086874	0.043437	-0.000000	-0.477329	0.477329
3.7	0.127522	0.163892	0.109261	0.054631	-0.000000	-0.600336	0.600336
3.8	0.083738	0.108304	0.132869	0.066435	-0.000000	-0.730050	0.730050
3.9	0.041529	0.053897	0.066264	0.078632	-0.000000	-0.864089	0.864089
AREA 1=	0.002985	0.002239	0.001492	0.000746	-0.000000	-0.008200	0.008200
AREA 2=	-0.032101	-0.024076	-0.016051	-0.008025	0.000000	0.088191	-0.088191
AREA 3=	0.069685	0.064685	0.051404	0.029843	-0.000000	-0.373442	0.373442

WYOMING HIGHWAY DEPARTMENT
BRIDGE DESIGN DIVISION

DATE
PAGE NO. 21

SAMPLE PROBLEM FOR REINFORCED CONCRETE BOX GIRDER 535770 DXC4DES

INFLUENCE LINES

LOAD POINTS	M 3.6	M 3.7	M 3.8	M 3.9	M 4.0L	V 4.0L	R 4.0
8.1	-0.000830	-0.000623	-0.000415	-0.000208	0.000000	0.002281	-0.002281
8.2	-0.001400	-0.001050	-0.000700	-0.000350	0.000000	0.003847	-0.003847
8.3	-0.001726	-0.001294	-0.000863	-0.000431	0.000000	0.004741	-0.004741
8.4	-0.001825	-0.001369	-0.000912	-0.000456	0.000000	0.005014	-0.005014
8.5	-0.001723	-0.001292	-0.000861	-0.000431	0.000000	0.004733	-0.004733
8.6	-0.001451	-0.001089	-0.000726	-0.000363	0.000000	0.003987	-0.003987
8.7	-0.001053	-0.000790	-0.000527	-0.000263	0.000000	0.002893	-0.002893
8.8	-0.000581	-0.000436	-0.000291	-0.000145	0.000000	0.001597	-0.001597
8.9	-0.000174	-0.000130	-0.000087	-0.000043	0.000000	0.000477	-0.000477
9.1	0.003286	0.002465	0.001643	0.000822	-0.000000	-0.009029	0.009029
9.2	0.005406	0.004055	0.002703	0.001352	-0.000000	-0.014852	0.014852
9.3	0.006477	0.004858	0.003239	0.001619	-0.000000	-0.017795	0.017795
9.4	0.006636	0.004977	0.003318	0.001659	-0.000000	-0.018231	0.018231
9.5	0.006042	0.004531	0.003021	0.001510	-0.000000	-0.016598	0.016598
9.6	0.004882	0.003661	0.002441	0.001220	-0.000000	-0.013412	0.013412
9.7	0.003383	0.002537	0.001691	0.000846	-0.000000	-0.009294	0.009294
9.8	0.001822	0.001366	0.000911	0.000455	-0.000000	-0.005004	0.005004
9.9	0.000545	0.000409	0.000272	0.000136	-0.000000	-0.001497	0.001497
AREA 8=	-0.000463	-0.000347	-0.000231	-0.000116	0.000000	0.001271	-0.001271
AREA 9=	0.001154	0.000866	0.000577	0.000289	-0.000000	-0.003171	0.003171
SUM - =	-0.032564	-0.024423	-0.016282	-0.008141	-0.000000	-0.384813	0.384813
SUM + =	0.073824	0.067790	0.053474	0.030878	0.000000	0.089462	-0.089462
SUM TOT	0.041260	0.043366	0.037192	0.022736	-0.000000	-0.295351	0.295351

SAMPLE PROBLEM FOR REINFORCED CONCRETE BOX GIRDER 585770 DXC4DES

INFLUENCE LINES

LOAD POINTS	V 8.0R	M 8.0R	M 8.1	M 8.2	M 8.3	M 8.4	M 8.5
1.1	0.048888	-0.017405	-0.015302	-0.013200	-0.011097	-0.008995	-0.006892
1.2	0.095233	-0.033898	-0.029803	-0.025708	-0.021613	-0.017518	-0.013423
1.3	0.135660	-0.048288	-0.042454	-0.036621	-0.030788	-0.024954	-0.019121
1.4	0.166955	-0.059427	-0.052248	-0.045069	-0.037890	-0.030711	-0.023532
1.5	0.186079	-0.066234	-0.058233	-0.050231	-0.042230	-0.034229	-0.026227
1.6	0.189990	-0.067626	-0.059457	-0.051287	-0.043118	-0.034948	-0.026779
1.7	0.175643	-0.062520	-0.054967	-0.047414	-0.039862	-0.032309	-0.024756
1.8	0.139997	-0.049832	-0.043812	-0.037792	-0.031772	-0.025752	-0.019732
1.9	0.081074	-0.028858	-0.025372	-0.021886	-0.018399	-0.014913	-0.011427
2.1	-0.121732	0.043330	0.038096	0.032861	0.027627	0.022392	0.017158
2.2	-0.200435	0.071344	0.062726	0.054107	0.045488	0.036869	0.028251
2.3	-0.237155	0.084415	0.074217	0.064019	0.053822	0.043624	0.033426
2.4	-0.238875	0.085027	0.074755	0.064483	0.054212	0.043940	0.033669
2.5	-0.214345	0.076295	0.067079	0.057862	0.048645	0.039428	0.030211
2.6	-0.172321	0.061337	0.053927	0.046518	0.039108	0.031698	0.024288
2.7	-0.121557	0.043268	0.038041	0.032814	0.027587	0.022360	0.017133
2.8	-0.070805	0.025203	0.022158	0.019114	0.016069	0.013024	0.009980
2.9	-0.028331	0.010084	0.008866	0.007648	0.006430	0.005211	0.003993
3.1	0.010232	-0.003642	-0.003202	-0.002762	-0.002322	-0.001882	-0.001442
3.2	0.017662	-0.006287	-0.005527	-0.004768	-0.004008	-0.003249	-0.002489
3.3	0.022151	-0.007885	-0.006932	-0.005980	-0.005027	-0.004075	-0.003122
3.4	0.023957	-0.008527	-0.007497	-0.006467	-0.005437	-0.004407	-0.003377
3.5	0.023461	-0.008351	-0.007342	-0.006333	-0.005324	-0.004316	-0.003307
3.6	0.021047	-0.007492	-0.006587	-0.005682	-0.004777	-0.003872	-0.002967
3.7	0.017100	-0.006087	-0.005351	-0.004616	-0.003881	-0.003145	-0.002410
3.8	0.012002	-0.004272	-0.003756	-0.003240	-0.002724	-0.002208	-0.001692
3.9	0.006161	-0.002193	-0.001928	-0.001663	-0.001398	-0.001133	-0.000868
AREA 1=	0.121953	-0.043409	-0.038165	-0.032921	-0.027677	-0.022433	-0.017189
AREA 2=	-0.219266	0.078047	0.068619	0.059190	0.049762	0.040333	0.030905
AREA 3=	0.013993	-0.004981	-0.004379	-0.003777	-0.003176	-0.002574	-0.001972

WYOMING HIGHWAY DEPARTMENT
BRIDGE DESIGN DIVISION

DATE
PAGE NO. 23

SAMPLE PROBLEM FOR REINFORCED CONCRETE BOX GIRDER

585770 DXC4DES

INFLUENCE LINES

LOAD POINTS	V 8.0R	M 8.0R	M 8.1	M 8.2	M 8.3	M 8.4	M 8.5
8.1	0.947879	-0.024917	0.015842	0.013601	0.011360	0.009118	0.006877
8.2	0.871900	-0.042028	-0.004536	0.032955	0.027447	0.021939	0.016430
8.3	0.774562	-0.051791	-0.018485	0.014822	0.048128	0.038434	0.028740
8.4	0.658980	-0.054774	-0.026438	0.001898	0.030234	0.058571	0.043907
8.5	0.529149	-0.051707	-0.028954	-0.006201	0.016553	0.039306	0.062060
8.6	0.390385	-0.043562	-0.026776	-0.009989	0.006797	0.023584	0.040371
8.7	0.250265	-0.031610	-0.020949	-0.010087	0.000674	0.011436	0.022197
8.8	0.124464	-0.017446	-0.012094	-0.006742	-0.001390	0.003962	0.009314
8.9	0.034425	-0.005211	-0.003730	-0.002250	-0.000770	0.000710	0.002191
9.1	0.003209	-0.001142	-0.001004	-0.000866	-0.000728	-0.000590	-0.000452
9.2	0.005279	-0.001879	-0.001652	-0.001425	-0.001198	-0.000971	-0.000744
9.3	0.006325	-0.002251	-0.001979	-0.001707	-0.001435	-0.001163	-0.000891
9.4	0.006480	-0.002307	-0.002028	-0.001749	-0.001471	-0.001192	-0.000913
9.5	0.005899	-0.002100	-0.001846	-0.001593	-0.001339	-0.001085	-0.000832
9.6	0.004767	-0.001697	-0.001492	-0.001287	-0.001082	-0.000877	-0.000672
9.7	0.003303	-0.001176	-0.001034	-0.000892	-0.000750	-0.000608	-0.000466
9.8	0.001779	-0.000633	-0.000557	-0.000480	-0.000404	-0.000327	-0.000251
9.9	0.000532	-0.000189	-0.000166	-0.000144	-0.000121	-0.000098	-0.000075
AREA 8=	0.218526	-0.013891	-0.005419	0.001204	0.005978	0.008904	0.009980
AREA 9=	0.001127	-0.000401	-0.000353	-0.000304	-0.000256	-0.000207	-0.000159
SUM - =	-0.219266	-0.062682	-0.048921	-0.038488	-0.031191	-0.025214	-0.019320
SUM + =	0.355600	0.078047	0.069224	0.061880	0.055823	0.049237	0.040885
SUM TOT	0.136333	0.015365	0.020303	0.023392	0.024632	0.024023	0.021565

WYOMING HIGHWAY DEPARTMENT
BRIDGE DESIGN DIVISION

DATE
PAGE NO. 24

SAMPLE PROBLEM FOR REINFORCED CONCRETE BOX GIRDER 585770 DXC4DES

INFLUENCE LINES

LOAD POINTS	M 8.6	M 8.7	M 8.8	M 8.9	M 9.0L	V 9.0L	R 9.0
1.1	-0.004780	-0.002687	-0.000584	0.001518	0.003621	0.048898	-0.048898
1.2	-0.009328	-0.005233	-0.001138	0.002957	0.007052	0.095233	-0.095233
1.3	-0.013287	-0.007454	-0.001621	0.004213	0.010046	0.135660	-0.135660
1.4	-0.016353	-0.009174	-0.001995	0.005184	0.012364	0.166955	-0.166955
1.5	-0.018226	-0.010224	-0.002223	0.005778	0.013780	0.186079	-0.186079
1.6	-0.018609	-0.010439	-0.002270	0.005900	0.014069	0.189990	-0.189990
1.7	-0.017204	-0.009651	-0.002098	0.005454	0.013007	0.175643	-0.175643
1.8	-0.013712	-0.007692	-0.001673	0.004347	0.010367	0.139997	-0.139997
1.9	-0.007941	-0.004455	-0.000969	0.002518	0.006004	0.081074	-0.081074
2.1	0.011923	0.006689	0.001454	-0.003780	-0.009015	-0.121732	0.121732
2.2	0.019632	0.011013	0.002395	-0.006224	-0.014843	-0.200435	0.200435
2.3	0.023229	0.013031	0.002833	-0.007364	-0.017562	-0.237155	0.237155
2.4	0.023397	0.013125	0.002854	-0.007418	-0.017690	-0.238875	0.238875
2.5	0.020994	0.011778	0.002561	-0.006656	-0.015873	-0.214345	0.214345
2.6	0.016978	0.009469	0.002059	-0.005351	-0.012761	-0.172321	0.172321
2.7	0.011906	0.006679	0.001452	-0.003775	-0.009002	-0.121557	0.121557
2.8	0.006935	0.003890	0.000846	-0.002199	-0.005243	-0.070805	0.070805
2.9	0.002775	0.001557	0.000338	-0.000880	-0.002098	-0.028331	0.028331
3.1	-0.001002	-0.000562	-0.000122	0.000318	0.000758	0.010232	-0.010232
3.2	-0.001730	-0.000970	-0.000211	0.000548	0.001308	0.017662	-0.017662
3.3	-0.002170	-0.001217	-0.000265	0.000688	0.001640	0.022151	-0.022151
3.4	-0.002346	-0.001316	-0.000286	0.000744	0.001774	0.023957	-0.023957
3.5	-0.002298	-0.001289	-0.000280	0.000729	0.001737	0.023461	-0.023461
3.6	-0.002062	-0.001156	-0.000251	0.000654	0.001559	0.021047	-0.021047
3.7	-0.001675	-0.000940	-0.000204	0.000531	0.001266	0.017100	-0.017100
3.8	-0.001176	-0.000659	-0.000143	0.000373	0.000889	0.012002	-0.012002
3.9	-0.000603	-0.000339	-0.000074	0.000191	0.000456	0.006161	-0.006161
AREA 1=	-0.011945	-0.006701	-0.001457	0.003787	0.009031	0.121953	-0.121953
AREA 2=	0.021476	0.012049	0.002620	-0.006809	-0.016237	-0.219266	0.219266
AREA 3=	-0.001371	-0.000769	-0.000167	0.000435	0.001036	0.013993	-0.013993

WYOMING HIGHWAY DEPARTMENT
BRIDGE DESIGN DIVISION
SAMPLE PROBLEM FOR REINFORCED CONCRETE BOX GIRDER 585770 DXC4DES

DATE
PAGE NO. 25

INFLUENCE LINES

LOAD POINTS	M 8.6	M 8.7	M 8.8	M 8.9	M 9.0L	V 9.0L	R 9.0
8.1	0.004636	0.002395	0.000154	-0.002087	-0.004329	-0.052121	0.052121
8.2	0.010922	0.005414	-0.000094	-0.005603	-0.011111	-0.128100	0.128100
8.3	0.019046	0.009352	-0.000341	-0.010035	-0.019729	-0.225438	0.225438
8.4	0.029243	0.014579	-0.000085	-0.014749	-0.029413	-0.341020	0.341020
8.5	0.041813	0.021567	0.001320	-0.018327	-0.039173	-0.470851	0.470851
8.6	0.057157	0.030944	0.004730	-0.021483	-0.047697	-0.609615	0.609615
8.7	0.032959	0.043720	0.011481	-0.020757	-0.052996	-0.749735	0.749735
8.8	0.014666	0.020018	0.025370	-0.012279	-0.049927	-0.875536	0.875536
8.9	0.003671	0.005151	0.006631	0.009112	-0.033408	-0.965575	0.965575
9.1	-0.000314	-0.000176	-0.000038	0.000100	0.000238	0.003209	-0.003209
9.2	-0.000517	-0.000290	-0.000063	0.000164	0.000391	0.005279	-0.005279
9.3	-0.000620	-0.000348	-0.000076	0.000196	0.000468	0.006325	-0.006325
9.4	-0.000635	-0.000356	-0.000077	0.000201	0.000480	0.006480	-0.006480
9.5	-0.000578	-0.000324	-0.000070	0.000183	0.000437	0.005899	-0.005899
9.6	-0.000467	-0.000262	-0.000057	0.000148	0.000353	0.004767	-0.004767
9.7	-0.000324	-0.000182	-0.000039	0.000103	0.000245	0.003303	-0.003303
9.8	-0.000174	-0.000098	-0.000021	0.000055	0.000132	0.001779	-0.001779
9.9	-0.000052	-0.000029	-0.000006	0.000017	0.000039	0.000532	-0.000532
AREA 8=	0.009207	0.006585	0.002114	-0.004206	-0.012375	-0.211473	0.211473
AREA 9=	-0.000110	-0.000062	-0.000013	0.000035	0.000083	0.001127	-0.001127
SUM - =	-0.013426	-0.007552	-0.001638	-0.011258	-0.028612	-0.430740	0.430740
SUM + =	0.030683	0.018633	0.004734	0.004500	0.010151	0.137073	-0.137073
SUM TOT	0.017257	0.011101	0.003096	-0.006758	-0.018461	-0.293666	0.293666

SAMPLE PROBLEM FOR REINFORCED CONCRETE BOX GIRDER 585770 DXC4DES

INFLUENCE LINES

LOAD POINTS	V 9.0R	M 9.0R	M 9.1	M 9.2	M 9.3	M 9.4	M 9.5
1.1	-0.018394	0.003983	0.003431	0.002879	0.002327	0.001775	0.001223
1.2	-0.035825	0.007757	0.006682	0.005607	0.004532	0.003457	0.002383
1.3	-0.051033	0.011049	0.009518	0.007987	0.006456	0.004925	0.003394
1.4	-0.062806	0.013598	0.011714	0.009830	0.007946	0.006061	0.004177
1.5	-0.070000	0.015156	0.013056	0.010956	0.008856	0.006756	0.004656
1.6	-0.071471	0.015474	0.013330	0.011186	0.009042	0.006898	0.004754
1.7	-0.066074	0.014306	0.012323	0.010341	0.008359	0.006377	0.004395
1.8	-0.052665	0.011402	0.009823	0.009243	0.006663	0.005083	0.003503
1.9	-0.030499	0.006603	0.005688	0.004773	0.003858	0.002943	0.002028
2.1	0.070728	-0.015313	-0.013192	-0.011070	-0.008948	-0.006826	-0.004704
2.2	0.169102	-0.036612	-0.031539	-0.026466	-0.021393	-0.016320	-0.011247
2.3	0.282337	-0.061129	-0.052659	-0.044189	-0.035719	-0.027248	-0.018778
2.4	0.392927	-0.085073	-0.073285	-0.061497	-0.049709	-0.037921	-0.026134
2.5	0.482486	-0.104463	-0.089988	-0.075514	-0.061039	-0.046565	-0.032090
2.6	0.532625	-0.115318	-0.099340	-0.083361	-0.067382	-0.051404	-0.035425
2.7	0.524953	-0.113657	-0.097909	-0.082160	-0.066412	-0.050663	-0.034915
2.8	0.441087	-0.095500	-0.082267	-0.069034	-0.055802	-0.042569	-0.029337
2.9	0.266629	-0.057728	-0.049729	-0.041730	-0.033731	-0.025732	-0.017733
3.1	-0.161053	0.034870	0.030038	0.025206	0.020375	0.015543	0.010712
3.2	-0.278009	0.060192	0.051851	0.043511	0.035171	0.026831	0.018490
3.3	-0.348683	0.075493	0.065033	0.054572	0.044112	0.033651	0.023191
3.4	-0.377100	0.081646	0.070333	0.059020	0.047707	0.036394	0.025081
3.5	-0.369294	0.079956	0.068877	0.057798	0.046719	0.035640	0.024561
3.6	-0.331304	0.071730	0.061791	0.051852	0.041913	0.031974	0.022035
3.7	-0.269167	0.058277	0.050202	0.042127	0.034052	0.025977	0.017902
3.8	-0.189918	0.040902	0.035235	0.029567	0.023900	0.018232	0.012565
3.9	-0.096985	0.020998	0.018089	0.015179	0.012269	0.009360	0.006450
AREA 1=	-0.045877	0.009933	0.008556	0.007180	0.005804	0.004428	0.003051
AREA 2=	0.493407	-0.106828	-0.092025	-0.077223	-0.062421	-0.047619	-0.032817
AREA 3=	-0.220266	0.047690	0.041082	0.034474	0.027866	0.021258	0.014650

SAMPLE PROBLEM FOR REINFORCED CONCRETE BOX GIRDER 585770 DXC4DES

INFLUENCE LINES

LOAD POINTS	V 9.0R	M 9.0R	M 9.1	M 9.2	M 9.3	M 9.4	M 9.5
8.1	0.012760	-0.002763	-0.002380	-0.001997	-0.001614	-0.001231	-0.000849
8.2	0.021523	-0.004660	-0.004014	-0.003369	-0.002723	-0.002077	-0.001431
8.3	0.026522	-0.005742	-0.004947	-0.004151	-0.003355	-0.002560	-0.001764
8.4	0.028050	-0.006073	-0.005232	-0.004390	-0.003549	-0.002707	-0.001866
8.5	0.026479	-0.005733	-0.004939	-0.004144	-0.003350	-0.002556	-0.001761
8.6	0.022308	-0.004830	-0.004161	-0.003491	-0.002822	-0.002153	-0.001484
8.7	0.016188	-0.003505	-0.003019	-0.002534	-0.002048	-0.001562	-0.001077
8.8	0.008934	-0.001934	-0.001666	-0.001398	-0.001130	-0.000862	-0.000594
8.9	0.002668	-0.000578	-0.000498	-0.000418	-0.000338	-0.000258	-0.000177
9.1	0.927745	-0.014299	0.013533	0.011365	0.009198	0.007030	0.004862
9.2	0.833686	-0.023523	0.001488	0.026498	0.021509	0.016519	0.011530
9.3	0.722052	-0.028184	-0.006522	0.015139	0.036801	0.028462	0.020124
9.4	0.597725	-0.028875	-0.010943	0.006988	0.024920	0.042852	0.030784
9.5	0.466404	-0.026288	-0.012296	0.001696	0.015688	0.029681	0.043673
9.6	0.336836	-0.021242	-0.011196	-0.001151	0.008894	0.018939	0.028984
9.7	0.211124	-0.014[illegible]0	-0.008386	-0.002052	0.004282	0.010615	0.016949
9.8	0.105190	-0.007[illegible]6	-0.004770	-0.001615	0.001541	0.004697	0.007852
9.9	0.029470	-0.002371	-0.001487	-0.000603	0.000282	0.001166	0.002050
AREA 8=	0.007114	-0.001140	-0.001327	-0.001113	-0.000900	-0.000687	-0.000473
AREA 9=	0.141847	-0.005023	-0.001217	0.001688	0.003693	0.004799	0.005004
SUM - =	-0.266143	-0.113591	-0.095002	-0.078489	-0.063321	-0.048305	-0.033290
SUM + =	0.642369	0.057623	0.050071	0.043494	0.037363	0.030484	0.022705
SUM TOT	0.376224	-0.055768	-0.044931	-0.034995	-0.025958	-0.017821	-0.010584

SAMPLE PROBLEM FOR REINFORCED CONCRETE BOX GIRDER 585770 DXC4DES

INFLUENCE LINES

LOAD POINTS	M 9.6	M 9.7	M 9.8	M 9.9	M10.0L	V10.0L	R10.0
1.1	0.000672	0.000120	-0.000432	-0.000984	-0.001536	-0.018394	0.018394
1.2	0.001308	0.000233	-0.000842	-0.001916	-0.002991	-0.035825	0.035825
1.3	0.001863	0.000332	-0.001199	-0.002730	-0.004261	-0.051033	0.051033
1.4	0.002293	0.000409	-0.001475	-0.003359	-0.005244	-0.062806	0.062806
1.5	0.002556	0.000456	-0.001644	-0.003744	-0.005844	-0.070000	0.070000
1.6	0.002609	0.000465	-0.001679	-0.003823	-0.005967	-0.071471	0.071471
1.7	0.002412	0.000430	-0.001552	-0.003534	-0.005517	-0.066074	0.066074
1.8	0.001923	0.000343	-0.001237	-0.002817	-0.004397	-0.052665	0.052665
1.9	0.001114	0.000199	-0.000716	-0.001631	-0.002546	-0.030499	0.030499
2.1	-0.002582	-0.000460	0.001661	0.003783	0.005905	0.070728	-0.070728
2.2	-0.006174	-0.001101	0.003972	0.009045	0.014118	0.169102	-0.169102
2.3	-0.010308	-0.001838	0.006632	0.015102	0.023572	0.282337	-0.282337
2.4	-0.014346	-0.002558	0.009230	0.021018	0.032806	0.392927	-0.392927
2.5	-0.017616	-0.003141	0.011334	0.025808	0.040283	0.482486	-0.482486
2.6	-0.019446	-0.003467	0.012511	0.028490	0.044469	0.532625	-0.532625
2.7	-0.019166	-0.003417	0.012331	0.028080	0.043828	0.524953	-0.524953
2.8	-0.016104	-0.002872	0.010361	0.023594	0.036826	0.441087	-0.441087
2.9	-0.009735	-0.001736	0.006263	0.014262	0.022261	0.266629	-0.266629
3.1	0.005880	0.001048	-0.003783	-0.008615	-0.013446	-0.161053	0.161053
3.2	0.010150	0.001810	-0.006530	-0.014871	-0.023211	-0.278009	0.278009
3.3	0.012730	0.002270	-0.008191	-0.018651	-0.029112	-0.348683	0.348683
3.4	0.013768	0.002455	-0.008858	-0.020171	-0.031484	-0.377100	0.377100
3.5	0.013483	0.002404	-0.008675	-0.019754	-0.030833	-0.369294	0.369294
3.6	0.012096	0.002157	-0.007783	-0.017722	-0.027661	-0.331304	0.331304
3.7	0.009827	0.001752	-0.006323	-0.014398	-0.022473	-0.269167	0.269167
3.8	0.006897	0.001230	-0.004438	-0.010105	-0.015773	-0.188918	0.188918
3.9	0.003541	0.000631	-0.002278	-0.005188	-0.008097	-0.096985	0.096985
AREA 1=	0.001675	0.000299	-0.001078	-0.002454	-0.003830	-0.045877	0.045877
AREA 2=	-0.018014	-0.003212	0.011590	0.026392	0.041195	0.493407	-0.493407
AREA 3=	0.008042	0.001434	-0.005174	-0.011782	-0.018390	-0.220266	0.220266

WYOMING HIGHWAY DEPARTMENT
BRIDGE DESIGN DIVISION
SAMPLE PROBLEM FOR REINFORCED CONCRETE BOX GIRDER 585770 DXC4DES

DATE
PAGE NO. 29

INFLUENCE LINES

LOAD POINTS	M 9.6	M 9.7	M 9.8	M 9.9	M10.0L	V10.0L	R10.0
8.1	-0.000466	-0.000083	0.000300	0.000683	0.001065	0.012760	-0.012760
8.2	-0.000786	-0.000140	0.000506	0.001151	0.001797	0.021523	-0.021523
8.3	-0.000968	-0.000173	0.000623	0.001419	0.002214	0.026522	-0.026522
8.4	-0.001024	-0.000183	0.000659	0.001500	0.002342	0.028050	-0.028050
8.5	-0.000967	-0.000172	0.000622	0.001416	0.002211	0.026479	-0.026479
8.6	-0.000814	-0.000145	0.000524	0.001193	0.001863	0.022308	-0.022308
8.7	-0.000591	-0.000105	0.000380	0.000866	0.001352	0.016188	-0.016188
8.8	-0.000326	-0.000058	0.000210	0.000478	0.000746	0.008934	-0.008934
8.9	-0.000097	-0.000017	0.000063	0.000143	0.000223	0.002668	-0.002668
9.1	0.002695	0.000527	-0.001641	-0.003808	-0.005976	-0.072255	0.072255
9.2	0.006540	0.001551	-0.003438	-0.008428	-0.013417	-0.166314	0.166314
9.3	0.011785	0.003447	-0.004892	-0.013230	-0.021568	-0.277948	0.277948
9.4	0.018715	0.006647	-0.005421	-0.017489	-0.029558	-0.402275	0.402275
9.5	0.027665	0.011657	-0.004351	-0.020359	-0.036367	-0.533596	0.533596
9.6	0.038029	0.018074	-0.000881	-0.020836	-0.040791	-0.665164	0.665164
9.7	0.023283	0.029616	0.005950	-0.017716	-0.041382	-0.788876	0.788876
9.8	0.011008	0.014164	0.017319	-0.009525	-0.036369	-0.894810	0.894810
9.9	0.002934	0.003818	0.004702	0.005586	-0.023530	-0.970530	0.970530
AREA 8=	-0.000260	-0.000046	0.000167	0.000381	0.000594	0.007114	-0.007114
AREA 9=	0.004310	0.002715	0.000220	-0.003174	-0.007469	-0.158153	0.158153
SUM - =	-0.018274	-0.003258	-0.006859	-0.017525	-0.029689	-0.424296	0.424296
SUM + =	0.014026	0.004447	0.012585	0.026888	0.041789	0.500521	-0.500521
SUM TOT	-0.004248	0.001189	0.005726	0.009363	0.012099	0.076225	-0.076225

WYOMING HIGHWAY DEPARTMENT
BRIDGE DIVISION
TENTH POINT SHEARS INFLUENCE LINES

SAMPLE PROBLEM FOR REINFORCED CONCRETE BOX GIRDER 585770 DXC4DES

LOAD POINT	V 1.1	V 1.2	V 1.3	V 1.4	V 1.5	V 1.6	V 1.7	V 1.8	V 1.9
1.0	0.0	0.0	0.0	0.0	0.0	0.0	0.0	0.0	0.0
1.1	0.86633	0.13367	-0.13367	-0.13367	-0.13367	-0.13367	-0.13367	-0.13367	-0.13367
1.2	0.73443	0.73443	-0.26557	-0.26557	-0.26557	-0.26557	-0.26557	-0.26557	-0.26557
1.3	0.60659	0.60659	0.60659	-0.39341	-0.39341	-0.39341	-0.39341	-0.39341	-0.39341
1.4	0.48505	0.48505	0.48505	-0.51495	-0.51495	-0.51495	-0.51495	-0.51495	-0.51495
1.5	0.37188	0.37188	0.37188	0.37188	-0.62812	-0.62812	-0.62812	-0.62812	-0.62812
1.6	0.26919	0.26919	0.26919	0.26919	0.26919	-0.73081	-0.73081	-0.73081	-0.73081
1.7	0.17906	0.17906	0.17906	0.17906	0.17906	0.17906	-0.82094	-0.82094	-0.82094
1.8	0.10361	0.10361	0.10361	0.10361	0.10361	0.10361	0.10361	-0.89639	-0.89639
1.9	0.04418	0.04418	0.04418	0.04418	0.04418	0.04418	0.04418	0.04418	-0.95582
2.0	0.0	0.0	0.0	0.0	0.0	0.0	0.0	0.0	0.0
2.1	-0.04894	-0.04894	-0.04894	-0.04894	-0.04894	-0.04894	-0.04894	-0.04894	-0.04894
2.2	-0.08058	-0.08058	-0.08058	-0.08058	-0.08058	-0.08058	-0.08058	-0.08058	-0.08058
2.3	-0.09534	-0.09534	-0.09534	-0.09534	-0.09534	-0.09534	-0.09534	-0.09534	-0.09534
2.4	-0.09603	-0.09603	-0.09603	-0.09603	-0.09603	-0.09603	-0.09603	-0.09603	-0.09603
2.5	-0.08617	-0.08617	-0.08617	-0.08617	-0.08617	-0.08617	-0.08617	-0.08617	-0.08617
2.6	-0.06927	-0.06927	-0.06927	-0.06927	-0.06927	-0.06927	-0.06927	-0.06927	-0.06927
2.7	-0.04887	-0.04887	-0.04887	-0.04887	-0.04887	-0.04887	-0.04887	-0.04887	-0.04887
2.8	-0.02846	-0.02846	-0.02846	-0.02846	-0.02846	-0.02846	-0.02846	-0.02846	-0.02846
2.9	-0.01139	-0.01139	-0.01139	-0.01139	-0.01139	-0.01139	-0.01139	-0.01139	-0.01139
3.0	0.0	0.0	0.0	0.0	0.0	0.0	0.0	0.0	0.0
3.1	0.00411	0.00411	0.00411	0.00411	0.00411	0.00411	0.00411	0.00411	0.00411
3.2	0.00710	0.00710	0.00710	0.00710	0.00710	0.00710	0.00710	0.00710	0.00710
3.3	0.00890	0.00890	0.00890	0.00890	0.00890	0.00890	0.00890	0.00890	0.00890
3.4	0.00963	0.00963	0.00963	0.00963	0.00963	0.00963	0.00963	0.00963	0.00963
3.5	0.00943	0.00943	0.00943	0.00943	0.00943	0.00943	0.00943	0.00943	0.00943
3.6	0.00846	0.00846	0.00846	0.00846	0.00846	0.00846	0.00846	0.00846	0.00846
3.7	0.00687	0.00687	0.00687	0.00687	0.00687	0.00687	0.00687	0.00687	0.00687
3.8	0.00482	0.00482	0.00482	0.00482	0.00482	0.00482	0.00482	0.00482	0.00482
3.9	0.00248	0.00248	0.00248	0.00248	0.00248	0.00248	0.00248	0.00248	0.00248
AREA 1=	0.31603	0.21603	0.11603	0.01603	-0.08397	-0.18397	-0.28397	-0.38397	-0.48397
1ST AREA=	-0.00668	-0.02665	-0.05959	-0.10501	-0.16217	-0.23011	-0.30770	-0.39357	-0.48618
AREA 2=	-0.08815	-0.08815	-0.08815	-0.08815	-0.08815	-0.08815	-0.08815	-0.08815	-0.08815
AREA 3=	0.00563	0.00563	0.00563	0.00563	0.00563	0.00563	0.00563	0.00563	0.00563

WYOMING HIGHWAY DEPARTMENT
BRIDGE DIVISION
TENTH POINT SHEARS INFLUENCE LINES

DATE
PAGE NO. 30

SAMPLE PROBLEM FOR REINFORCED CONCRETE BOX GIRDER 585770 DXC4DES

LOAD POINT	V 1.1	V 1.2	V 1.3	V 1.4	V 1.5	V 1.6	V 1.7	V 1.8	V 1.9	
8.0	0.0	0.0	0.0	0.0	0.0	0.0	0.0	0.0	0.0	
8.1	-0.01364	-0.01364	-0.01364	-0.01364	-0.01364	-0.01364	-0.01364	-0.01364	-0.01364	
8.2	-0.02300	-0.02300	-0.02300	-0.02300	-0.02300	-0.02300	-0.02300	-0.02300	-0.02300	
8.3	-0.02834	-0.02834	-0.02834	-0.02834	-0.02834	-0.02834	-0.02834	-0.02834	-0.02834	
8.4	-0.02997	-0.02997	-0.02997	-0.02997	-0.02997	-0.02997	-0.02997	-0.02997	-0.02997	
8.5	-0.02830	-0.02830	-0.02830	-0.02830	-0.02830	-0.02830	-0.02830	-0.02830	-0.02830	
8.6	-0.02384	-0.02384	-0.02384	-0.02384	-0.02384	-0.02384	-0.02384	-0.02384	-0.02384	
8.7	-0.01730	-0.01730	-0.01730	-0.01730	-0.01730	-0.01730	-0.01730	-0.01730	-0.01730	
8.8	-0.00955	-0.00955	-0.00955	-0.00955	-0.00955	-0.00955	-0.00955	-0.00955	-0.00955	
8.9	-0.00285	-0.00285	-0.00285	-0.00285	-0.00285	-0.00285	-0.00285	-0.00285	-0.00285	
9.0	0.0	0.0	0.0	0.0	0.0	0.0	0.0	0.0	0.0	
9.1	0.00129	0.00129	0.00129	0.00129	0.00129	0.00129	0.00129	0.00129	0.00129	
9.2	0.00212	0.00212	0.00212	0.00212	0.00212	0.00212	0.00212	0.00212	0.00212	
9.3	0.00254	0.00254	0.00254	0.00254	0.00254	0.00254	0.00254	0.00254	0.00254	
9.4	0.00260	0.00260	0.00260	0.00260	0.00260	0.00260	0.00260	0.00260	0.00260	
9.5	0.00237	0.00237	0.00237	0.00237	0.00237	0.00237	0.00237	0.00237	0.00237	
9.6	0.00192	0.00192	0.00192	0.00192	0.00192	0.00192	0.00192	0.00192	0.00192	
9.7	0.00133	0.00133	0.00133	0.00133	0.00133	0.00133	0.00133	0.00133	0.00133	
9.8	0.00072	0.00072	0.00072	0.00072	0.00072	0.00072	0.00072	0.00072	0.00072	
9.9	0.00021	0.00021	0.00021	0.00021	0.00021	0.00021	0.00021	0.00021	0.00021	
AREA 8=	-0.00760	-0.00760	-0.00760	-0.00760	-0.00760	-0.00760	-0.00760	-0.00760	-0.00760	
AREA 9=	0.00045	0.00045	0.00045	0.00045	0.00045	0.00045	0.00045	0.00045	0.00045	
SUM -	-0.10243	-0.12239	-0.15534	-0.20076	-0.25791	-0.32586	-0.40345	-0.48931	-0.5	
SUM +	0.32879	0.24375	0.18170	0.12712	0.08428	0.05222	0.02981	0.01568	0.0	
SUM T	0.22636	0.12636	0.02636	-0.07364	-0.17364	-0.27364	-0.37364	-0.47364	-0.5	

WYOMING HIGHWAY DEPARTMENT
BRIDGE DIVISION
TENTH POINT SHEARS INFLUENCE LINES

DATE
PAGE NO. 31

SAMPLE PROBLEM FOR REINFORCED CONCRETE BOX GIRDER 585770 DXC4DES

LOAD POINT	V 2.1	V 2.2	V 2.3	V 2.4	V 2.5	V 2.6	V 2.7	V 2.8	V 2.9
1.0	0.0	0.0	0.0	0.0	0.0	0.0	0.0	0.0	0.0
1.1	0.01490	0.01490	0.01490	0.01490	0.01490	0.01490	0.01490	0.01490	0.01490
1.2	0.02901	0.02901	0.02901	0.02901	0.02901	0.02901	0.02901	0.02901	0.02901
1.3	0.04133	0.04133	0.04133	0.04133	0.04133	0.04133	0.04133	0.04133	0.04133
1.4	0.05086	0.05086	0.05086	0.05086	0.05086	0.05086	0.05086	0.05086	0.05086
1.5	0.05669	0.05669	0.05669	0.05669	0.05669	0.05669	0.05669	0.05669	0.05669
1.6	0.05788	0.05788	0.05788	0.05788	0.05788	0.05788	0.05788	0.05788	0.05788
1.7	0.05351	0.05351	0.05351	0.05351	0.05351	0.05351	0.05351	0.05351	0.05351
1.8	0.04265	0.04265	0.04265	0.04265	0.04265	0.04265	0.04265	0.04265	0.04265
1.9	0.02470	0.02470	0.02470	0.02470	0.02470	0.02470	0.02470	0.02470	0.02470
2.0	0.0	0.0	0.0	0.0	0.0	0.0	0.0	0.0	0.0
2.1	0.94195	-0.05805	-0.05805	-0.05805	-0.05805	-0.05805	-0.05805	-0.05805	-0.05805
2.2	0.85628	0.85628	-0.14372	-0.14372	-0.14372	-0.14372	-0.14372	-0.14372	-0.14372
2.3	0.74660	0.74660	0.74660	-0.25340	-0.25340	-0.25340	-0.25340	-0.25340	-0.25340
2.4	0.62056	0.62056	0.62056	0.62056	-0.37944	-0.37944	-0.37944	-0.37944	-0.37944
2.5	0.48687	0.48687	0.48687	0.48687	-0.51313	-0.51313	-0.51313	-0.51313	-0.51313
2.6	0.35427	0.35427	0.35427	0.35427	0.35427	-0.64573	-0.64573	-0.64573	-0.64573
2.7	0.23147	0.23147	0.23147	0.23147	0.23147	0.23147	-0.76853	-0.76853	-0.76853
2.8	0.12719	0.12719	0.12719	0.12719	0.12719	0.12719	0.12719	-0.87281	-0.87281
2.9	0.04896	0.04896	0.04896	0.04896	0.04896	0.04896	0.04896	0.04896	-0.95104
3.0	0.0	0.0	0.0	0.0	0.0	0.0	0.0	0.0	0.0
3.1	-0.01740	-0.01740	-0.01740	-0.01740	-0.01740	-0.01740	-0.01740	-0.01740	-0.01740
3.2	-0.03004	-0.03004	-0.03004	-0.03004	-0.03004	-0.03004	-0.03004	-0.03004	-0.03004
3.3	-0.03768	-0.03768	-0.03768	-0.03768	-0.03768	-0.03768	-0.03768	-0.03768	-0.03768
3.4	-0.04075	-0.04075	-0.04075	-0.04075	-0.04075	-0.04075	-0.04075	-0.04075	-0.04075
3.5	-0.03991	-0.03991	-0.03991	-0.03991	-0.03991	-0.03991	-0.03991	-0.03991	-0.03991
3.6	-0.03580	-0.03580	-0.03580	-0.03580	-0.03580	-0.03580	-0.03580	-0.03580	-0.03580
3.7	-0.02909	-0.02909	-0.02909	-0.02909	-0.02909	-0.02909	-0.02909	-0.02909	-0.02909
3.8	-0.02042	-0.02042	-0.02042	-0.02042	-0.02042	-0.02042	-0.02042	-0.02042	-0.02042
3.9	-0.01048	-0.01048	-0.01048	-0.01048	-0.01048	-0.01048	-0.01048	-0.01048	-0.01048
AREA 1=	0.03715	0.03715	0.03715	0.03715	0.03715	0.03715	0.03715	0.03715	0.03715
AREA 2=	0.39142	0.29142	0.19142	0.09142	-0.00858	-0.10858	-0.20858	-0.30858	-0.40858
1ST AREA=	-0.00290	-0.01299	-0.03285	-0.06449	-0.10912	-0.16706	-0.23777	-0.31984	-0.41103
AREA 3=	-0.02380	-0.02380	-0.02380	-0.02380	-0.02380	-0.02380	-0.02380	-0.02380	-0.02380

WYOMING HIGHWAY DEPARTMENT
BRIDGE DIVISION
TENTH POINT SHEARS INFLUENCE LINES

DATE
PAGE NO. 32

SAMPLE PROBLEM FOR REINFORCED CONCRETE BOX GIRDER 585770 DXC4DES

LOAD POINT	V 2.1	V 2.2	V 2.3	V 2.4	V 2.5	V 2.6	V 2.7	V 2.8	V 2.9
8.0	0.0	0.0	0.0	0.0	0.0	0.0	0.0	0.0	0.0
8.1	-0.01033	-0.01033	-0.01033	-0.01033	-0.01033	-0.01033	-0.01033	-0.01033	-0.01033
8.2	-0.01743	-0.01743	-0.01743	-0.01743	-0.01743	-0.01743	-0.01743	-0.01743	-0.01743
8.3	-0.02148	-0.02148	-0.02148	-0.02148	-0.02148	-0.02148	-0.02148	-0.02148	-0.02148
8.4	-0.02271	-0.02271	-0.02271	-0.02271	-0.02271	-0.02271	-0.02271	-0.02271	-0.02271
8.5	-0.02144	-0.02144	-0.02144	-0.02144	-0.02144	-0.02144	-0.02144	-0.02144	-0.02144
8.6	-0.01806	-0.01806	-0.01806	-0.01806	-0.01806	-0.01806	-0.01806	-0.01806	-0.01806
8.7	-0.01311	-0.01311	-0.01311	-0.01311	-0.01311	-0.01311	-0.01311	-0.01311	-0.01311
8.8	-0.00723	-0.00723	-0.00723	-0.00723	-0.00723	-0.00723	-0.00723	-0.00723	-0.00723
8.9	-0.00216	-0.00216	-0.00216	-0.00216	-0.00216	-0.00216	-0.00216	-0.00216	-0.00216
9.0	0.0	0.0	0.0	0.0	0.0	0.0	0.0	0.0	0.0
9.1	-0.00546	-0.00546	-0.00546	-0.00546	-0.00546	-0.00546	-0.00546	-0.00546	-0.00546
9.2	-0.00898	-0.00898	-0.00898	-0.00898	-0.00898	-0.00898	-0.00898	-0.00898	-0.00898
9.3	-0.01076	-0.01076	-0.01076	-0.01076	-0.01076	-0.01076	-0.01076	-0.01076	-0.01076
9.4	-0.01102	-0.01102	-0.01102	-0.01102	-0.01102	-0.01102	-0.01102	-0.01102	-0.01102
9.5	-0.01004	-0.01004	-0.01004	-0.01004	-0.01004	-0.01004	-0.01004	-0.01004	-0.01004
9.6	-0.00811	-0.00811	-0.00811	-0.00811	-0.00811	-0.00811	-0.00811	-0.00811	-0.00811
9.7	-0.00562	-0.00562	-0.00562	-0.00562	-0.00562	-0.00562	-0.00562	-0.00562	-0.00562
9.8	-0.00303	-0.00303	-0.00303	-0.00303	-0.00303	-0.00303	-0.00303	-0.00303	-0.00303
9.9	-0.00091	-0.00091	-0.00091	-0.00091	-0.00091	-0.00091	-0.00091	-0.00091	-0.00091
AREA 8=	-0.00576	-0.00576	-0.00576	-0.00576	-0.00576	-0.00576	-0.00576	-0.00576	-0.00576
AREA 9=	-0.00192	-0.00192	-0.00192	-0.00192	-0.00192	-0.00192	-0.00192	-0.00192	-0.00192
SUM -	-0.03438	-0.04747	-0.06433	-0.09597	-0.14060	-0.19854	-0.26925	-0.35132	-0.4
SUM +	0.43147	0.34156	0.26141	0.19305	0.13768	0.09563	0.06634	0.04841	0.0
SUM T	0.39709	0.29709	0.19709	0.09709	-0.00291	-0.10291	-0.20291	-0.30291	-0.4

SAMPLE PROBLEM FOR REINFORCED CONCRETE BOX GIRDER 585770 DXC4DES

LOAD POINT	V 3.1	V 3.2	V 3.3	V 3.4	V 3.5	V 3.6	V 3.7	V 3.8	V 3.9
1.0	0.0	0.0	0.0	0.0	0.0	0.0	0.0	0.0	0.0
1.1	-0.00329	-0.00329	-0.00329	-0.00329	-0.00329	-0.00329	-0.00329	-0.00329	-0.00329
1.2	-0.00640	-0.00640	-0.00640	-0.00640	-0.00640	-0.00640	-0.00640	-0.00640	-0.00640
1.3	-0.00912	-0.00912	-0.00912	-0.00912	-0.00912	-0.00912	-0.00912	-0.00912	-0.00912
1.4	-0.01123	-0.01123	-0.01123	-0.01123	-0.01123	-0.01123	-0.01123	-0.01123	-0.01123
1.5	-0.01251	-0.01251	-0.01251	-0.01251	-0.01251	-0.01251	-0.01251	-0.01251	-0.01251
1.6	-0.01277	-0.01277	-0.01277	-0.01277	-0.01277	-0.01277	-0.01277	-0.01277	-0.01277
1.7	-0.01181	-0.01181	-0.01181	-0.01181	-0.01181	-0.01181	-0.01181	-0.01181	-0.01181
1.8	-0.00941	-0.00941	-0.00941	-0.00941	-0.00941	-0.00941	-0.00941	-0.00941	-0.00941
1.9	-0.00545	-0.00545	-0.00545	-0.00545	-0.00545	-0.00545	-0.00545	-0.00545	-0.00545
2.0	0.0	0.0	0.0	0.0	0.0	0.0	0.0	0.0	0.0
2.1	0.01264	0.01264	0.01264	0.01264	0.01264	0.01264	0.01264	0.01264	0.01264
2.2	0.03023	0.03023	0.03023	0.03023	0.03023	0.03023	0.03023	0.03023	0.03023
2.3	0.05046	0.05046	0.05046	0.05046	0.05046	0.05046	0.05046	0.05046	0.05046
2.4	0.07023	0.07023	0.07023	0.07023	0.07023	0.07023	0.07023	0.07023	0.07023
2.5	0.08624	0.08624	0.08624	0.08624	0.08624	0.08624	0.08624	0.08624	0.08624
2.6	0.09520	0.09520	0.09520	0.09520	0.09520	0.09520	0.09520	0.09520	0.09520
2.7	0.09383	0.09383	0.09383	0.09383	0.09383	0.09383	0.09383	0.09383	0.09383
2.8	0.07884	0.07884	0.07884	0.07884	0.07884	0.07884	0.07884	0.07884	0.07884
2.9	0.04766	0.04766	0.04766	0.04766	0.04766	0.04766	0.04766	0.04766	0.04766
3.0	0.0	0.0	0.0	0.0	0.0	0.0	0.0	0.0	0.0
3.1	0.95963	-0.04037	-0.04037	-0.04037	-0.04037	-0.04037	-0.04037	-0.04037	-0.04037
3.2	0.90294	0.90294	-0.09706	-0.09706	-0.09706	-0.09706	-0.09706	-0.09706	-0.09706
3.3	0.82911	0.82911	0.82911	-0.17089	-0.17089	-0.17089	-0.17089	-0.17089	-0.17089
3.4	0.73963	0.73963	0.73963	0.73963	-0.26037	-0.26037	-0.26037	-0.26037	-0.26037
3.5	0.63674	0.63674	0.63674	0.63674	0.63674	-0.36326	-0.36326	-0.36326	-0.36326
3.6	0.52267	0.52267	0.52267	0.52267	0.52267	0.52267	-0.47733	-0.47733	-0.47733
3.7	0.39966	0.39966	0.39966	0.39966	0.39966	0.39966	-0.60034	-0.60034	-0.60034
3.8	0.26995	0.26995	0.26995	0.26995	0.26995	0.26995	0.26995	-0.73005	-0.73005
3.9	0.13591	0.13591	0.13591	0.13591	0.13591	0.13591	0.13591	0.13591	-0.86409
AREA 1=	-0.00820	-0.00820	-0.00820	-0.00820	-0.00820	-0.00820	-0.00820	-0.00820	-0.00820
AREA 2=	0.08819	0.08819	0.08819	0.08819	0.08819	0.08819	0.08819	0.08819	0.08819
AREA 3=	0.48962	0.38962	0.28962	0.18962	0.08962	-0.01038	-0.11038	-0.21038	-0.31038
1ST AREA=	-0.00202	-0.00889	-0.02229	-0.04385	-0.07503	-0.11706	-0.17095	-0.23746	-0.31717

WYOMING HIGHWAY DEPARTMENT
BRIDGE DIVISION
TENTH POINT SHEARS INFLUENCE LINES

DATE
PAGE NO. 34

SAMPLE PROBLEM FOR REINFORCED CONCRETE BOX GIRDER 585770 DXC4DES

LOAD POINT	V 3.1	V 3.2	V 3.3	V 3.4	V 3.5	V 3.6	V 3.7	V 3.8	V 3.9
0.0	0.0	0.0	0.0	0.0	0.0	0.0	0.0	0.0	0.0
0.1	0.00228	0.00228	0.00228	0.00228	0.00228	0.00228	0.00228	0.00228	0.00228
0.2	0.00385	0.00385	0.00385	0.00385	0.00385	0.00385	0.00385	0.00385	0.00385
0.3	0.00474	0.00474	0.00474	0.00474	0.00474	0.00474	0.00474	0.00474	0.00474
0.4	0.00501	0.00501	0.00501	0.00501	0.00501	0.00501	0.00501	0.00501	0.00501
0.5	0.00473	0.00473	0.00473	0.00473	0.00473	0.00473	0.00473	0.00473	0.00473
0.6	0.00399	0.00399	0.00399	0.00399	0.00399	0.00399	0.00399	0.00399	0.00399
0.7	0.00289	0.00289	0.00289	0.00289	0.00289	0.00289	0.00289	0.00289	0.00289
0.8	0.00160	0.00160	0.00160	0.00160	0.00160	0.00160	0.00160	0.00160	0.00160
0.9	0.00048	0.00048	0.00048	0.00048	0.00048	0.00048	0.00048	0.00048	0.00048
0.0	0.0	0.0	0.0	0.0	0.0	0.0	0.0	0.0	0.0
0.1	-0.00903	-0.00903	-0.00903	-0.00903	-0.00903	-0.00903	-0.00903	-0.00903	-0.00903
0.2	-0.01485	-0.01485	-0.01485	-0.01485	-0.01485	-0.01485	-0.01485	-0.01485	-0.01485
0.3	-0.01780	-0.01780	-0.01780	-0.01780	-0.01780	-0.01780	-0.01780	-0.01780	-0.01780
0.4	-0.01823	-0.01823	-0.01823	-0.01823	-0.01823	-0.01823	-0.01823	-0.01823	-0.01823
0.5	-0.01660	-0.01660	-0.01660	-0.01660	-0.01660	-0.01660	-0.01660	-0.01660	-0.01660
0.6	-0.01341	-0.01341	-0.01341	-0.01341	-0.01341	-0.01341	-0.01341	-0.01341	-0.01341
0.7	-0.00929	-0.00929	-0.00929	-0.00929	-0.00929	-0.00929	-0.00929	-0.00929	-0.00929
0.8	-0.00500	-0.00500	-0.00500	-0.00500	-0.00500	-0.00500	-0.00500	-0.00500	-0.00500
0.9	-0.00150	-0.00150	-0.00150	-0.00150	-0.00150	-0.00150	-0.00150	-0.00150	-0.00150
AREA 0=	0.00127	0.00127	0.00127	0.00127	0.00127	0.00127	0.00127	0.00127	0.00127
AREA 0=	-0.00317	-0.00317	-0.00317	-0.00317	-0.00317	-0.00317	-0.00317	-0.00317	-0.00317
SUM -	-0.01339	-0.02026	-0.03366	-0.05522	-0.08640	-0.12843	-0.18232	-0.24884	-0.3
SUM +	0.58110	0.48798	0.40137	0.32294	0.25412	0.19615	0.15003	0.11655	0.0
SUM T	0.56771	0.46771	0.36771	0.26771	0.16771	0.06771	-0.03229	-0.13229	-0.2

WYOMING HIGHWAY DEPARTMENT
BRIDGE DIVISION
TENTH POINT SHEARS INFLUENCE LINES

DATE
PAGE NO. 35

SAMPLE PROBLEM FOR REINFORCED CONCRETE BOX GIRDER 585770 DXC4DES

LOAD POINT	V 8.1	V 8.2	V 8.3	V 8.4	V 8.5	V 8.6	V 8.7	V 8.8	V 8.9
1.0	0.0	0.0	0.0	0.0	0.0	0.0	0.0	0.0	0.0
1.1	0.04890	0.04890	0.04890	0.04890	0.04890	0.04890	0.04890	0.04890	0.04890
1.2	0.09523	0.09523	0.09523	0.09523	0.09523	0.09523	0.09523	0.09523	0.09523
1.3	0.13566	0.13566	0.13566	0.13566	0.13566	0.13566	0.13566	0.13566	0.13566
1.4	0.16696	0.16696	0.16696	0.16696	0.16696	0.16696	0.16696	0.16696	0.16696
1.5	0.18608	0.18608	0.18608	0.18608	0.18608	0.18608	0.18608	0.18608	0.18608
1.6	0.18999	0.18999	0.18999	0.18999	0.18999	0.18999	0.18999	0.18999	0.18999
1.7	0.17564	0.17564	0.17564	0.17564	0.17564	0.17564	0.17564	0.17564	0.17564
1.8	0.14000	0.14000	0.14000	0.14000	0.14000	0.14000	0.14000	0.14000	0.14000
1.9	0.08107	0.08107	0.08107	0.08107	0.08107	0.08107	0.08107	0.08107	0.08107
2.0	0.0	0.0	0.0	0.0	0.0	0.0	0.0	0.0	0.0
2.1	-0.12173	-0.12173	-0.12173	-0.12173	-0.12173	-0.12173	-0.12173	-0.12173	-0.12173
2.2	-0.20044	-0.20044	-0.20044	-0.20044	-0.20044	-0.20044	-0.20044	-0.20044	-0.20044
2.3	-0.23715	-0.23715	-0.23715	-0.23715	-0.23715	-0.23715	-0.23715	-0.23715	-0.23715
2.4	-0.23887	-0.23887	-0.23887	-0.23887	-0.23887	-0.23887	-0.23887	-0.23887	-0.23887
2.5	-0.21435	-0.21435	-0.21435	-0.21435	-0.21435	-0.21435	-0.21435	-0.21435	-0.21435
2.6	-0.17232	-0.17232	-0.17232	-0.17232	-0.17232	-0.17232	-0.17232	-0.17232	-0.17232
2.7	-0.12156	-0.12156	-0.12156	-0.12156	-0.12156	-0.12156	-0.12156	-0.12156	-0.12156
2.8	-0.07080	-0.07080	-0.07080	-0.07080	-0.07080	-0.07080	-0.07080	-0.07080	-0.07080
2.9	-0.02833	-0.02833	-0.02833	-0.02833	-0.02833	-0.02833	-0.02833	-0.02833	-0.02833
3.0	0.0	0.0	0.0	0.0	0.0	0.0	0.0	0.0	0.0
3.1	0.01023	0.01023	0.01023	0.01023	0.01023	0.01023	0.01023	0.01023	0.01023
3.2	0.01766	0.01766	0.01766	0.01766	0.01766	0.01766	0.01766	0.01766	0.01766
3.3	0.02215	0.02215	0.02215	0.02215	0.02215	0.02215	0.02215	0.02215	0.02215
3.4	0.02396	0.02396	0.02396	0.02396	0.02396	0.02396	0.02396	0.02396	0.02396
3.5	0.02346	0.02346	0.02346	0.02346	0.02346	0.02346	0.02346	0.02346	0.02346
3.6	0.02105	0.02105	0.02105	0.02105	0.02105	0.02105	0.02105	0.02105	0.02105
3.7	0.01710	0.01710	0.01710	0.01710	0.01710	0.01710	0.01710	0.01710	0.01710
3.8	0.01200	0.01200	0.01200	0.01200	0.01200	0.01200	0.01200	0.01200	0.01200
3.9	0.00616	0.00616	0.00616	0.00616	0.00616	0.00616	0.00616	0.00616	0.00616
AREA 1=	0.12195	0.12195	0.12195	0.12195	0.12195	0.12195	0.12195	0.12195	0.12195
AREA 2=	-0.21927	-0.21927	-0.21927	-0.21927	-0.21927	-0.21927	-0.21927	-0.21927	-0.21927
AREA 3=	0.01399	0.01399	0.01399	0.01399	0.01399	0.01399	0.01399	0.01399	0.01399

WYOMING HIGHWAY DEPARTMENT
BRIDGE DIVISION
TENTH POINT SHEARS INFLUENCE LINES

DATE
PAGE NO. 36

SAMPLE PROBLEM FOR REINFORCED CONCRETE BOX GIRDER 585770 DXC4DES

LOAD POINT	V 8.1	V 8.2	V 8.3	V 8.4	V 8.5	V 8.6	V 8.7	V 8.8	V 8.9
8.0	0.0	0.0	0.0	0.0	0.0	0.0	0.0	0.0	0.0
8.1	0.94788	-0.05212	-0.05212	-0.05212	-0.05212	-0.05212	-0.05212	-0.05212	-0.05212
8.2	0.87190	0.87190	-0.12810	-0.12810	-0.12810	-0.12810	-0.12810	-0.12810	-0.12810
8.3	0.77456	0.77456	0.77456	-0.22544	-0.22544	-0.22544	-0.22544	-0.22544	-0.22544
8.4	0.65898	0.65898	0.65898	0.65898	-0.34102	-0.34102	-0.34102	-0.34102	-0.34102
8.5	0.52915	0.52915	0.52915	0.52915	0.52915	-0.47085	-0.47085	-0.47085	-0.47085
8.6	0.39038	0.39038	0.39038	0.39038	0.39038	-0.60962	-0.60962	-0.60962	-0.60962
8.7	0.25027	0.25027	0.25027	0.25027	0.25027	0.25027	-0.74973	-0.74973	-0.74973
8.8	0.12446	0.12446	0.12446	0.12446	0.12446	0.12446	0.12446	-0.87554	-0.87554
8.9	0.03442	0.03442	0.03442	0.03442	0.03442	0.03442	0.03442	0.03442	-0.96558
9.0	0.0	0.0	0.0	0.0	0.0	0.0	0.0	0.0	0.0
9.1	0.00321	0.00321	0.00321	0.00321	0.00321	0.00321	0.00321	0.00321	0.00321
9.2	0.00528	0.00528	0.00528	0.00528	0.00528	0.00528	0.00528	0.00528	0.00528
9.3	0.00632	0.00632	0.00632	0.00632	0.00632	0.00632	0.00632	0.00632	0.00632
9.4	0.00648	0.00648	0.00648	0.00648	0.00648	0.00648	0.00648	0.00648	0.00648
9.5	0.00590	0.00590	0.00590	0.00590	0.00590	0.00590	0.00590	0.00590	0.00590
9.6	0.00477	0.00477	0.00477	0.00477	0.00477	0.00477	0.00477	0.00477	0.00477
9.7	0.00330	0.00330	0.00330	0.00330	0.00330	0.00330	0.00330	0.00330	0.00330
9.8	0.00178	0.00178	0.00178	0.00178	0.00178	0.00178	0.00178	0.00178	0.00178
9.9	0.00053	0.00053	0.00053	0.00053	0.00053	0.00053	0.00053	0.00053	0.00053
AREA 8=	0.40820	0.30820	0.20820	0.10820	0.00820	-0.09180	-0.19180	-0.29180	-0.39180
1ST AREA=	-0.00261	-0.01162	-0.02929	-0.05762	-0.09821	-0.15223	-0.22020	-0.30146	-0.39352
AREA 9=	0.00113	0.00113	0.00113	0.00113	0.00113	0.00113	0.00113	0.00113	0.00113
SUM -	-0.22187	-0.23088	-0.24856	-0.27689	-0.31748	-0.46330	-0.63127	-0.81253	-1.00
SUM +	0.95608	0.76508	0.58277	0.41109	0.25169	0.19751	0.16548	0.14674	0.13
SUM T	0.73421	0.53421	0.33421	0.13421	-0.06579	-0.26579	-0.46579	-0.66579	-0.86

WYOMING HIGHWAY DEPARTMENT
BRIDGE DIVISION
TENTH POINT SHEARS INFLUENCE LINES

DATE
PAGE NO. 37

SAMPLE PROBLEM FOR REINFORCED CONCRETE BOX GIRDER 585770 DXC4DES

LOAD POINT	V 9.1	V 9.2	V 9.3	V 9.4	V 9.5	V 9.6	V 9.7	V 9.8	V 9.9
1.0	0.0	0.0	0.0	0.0	0.0	0.0	0.0	0.0	0.0
1.1	-0.01839	-0.01839	-0.01839	-0.01839	-0.01839	-0.01839	-0.01839	-0.01839	-0.01839
1.2	-0.03583	-0.03583	-0.03583	-0.03583	-0.03583	-0.03583	-0.03583	-0.03583	-0.03583
1.3	-0.05103	-0.05103	-0.05103	-0.05103	-0.05103	-0.05103	-0.05103	-0.05103	-0.05103
1.4	-0.06281	-0.06281	-0.06281	-0.06281	-0.06281	-0.06281	-0.06281	-0.06281	-0.06281
1.5	-0.07000	-0.07000	-0.07000	-0.07000	-0.07000	-0.07000	-0.07000	-0.07000	-0.07000
1.6	-0.07147	-0.07147	-0.07147	-0.07147	-0.07147	-0.07147	-0.07147	-0.07147	-0.07147
1.7	-0.06607	-0.06607	-0.06607	-0.06607	-0.06607	-0.06607	-0.06607	-0.06607	-0.06607
1.8	-0.05266	-0.05266	-0.05266	-0.05266	-0.05266	-0.05266	-0.05266	-0.05266	-0.05266
1.9	-0.03050	-0.03050	-0.03050	-0.03050	-0.03050	-0.03050	-0.03050	-0.03050	-0.03050
2.0	0.0	0.0	0.0	0.0	0.0	0.0	0.0	0.0	0.0
2.1	0.07073	0.07073	0.07073	0.07073	0.07073	0.07073	0.07073	0.07073	0.07073
2.2	0.16910	0.16910	0.16910	0.16910	0.16910	0.16910	0.16910	0.16910	0.16910
2.3	0.28234	0.28234	0.28234	0.28234	0.28234	0.28234	0.28234	0.28234	0.28234
2.4	0.39293	0.39293	0.39293	0.39293	0.39293	0.39293	0.39293	0.39293	0.39293
2.5	0.48249	0.48249	0.48249	0.48249	0.48249	0.48249	0.48249	0.48249	0.48249
2.6	0.53262	0.53262	0.53262	0.53262	0.53262	0.53262	0.53262	0.53262	0.53262
2.7	0.52495	0.52495	0.52495	0.52495	0.52495	0.52495	0.52495	0.52495	0.52495
2.8	0.44109	0.44109	0.44109	0.44109	0.44109	0.44109	0.44109	0.44109	0.44109
2.9	0.26663	0.26663	0.26663	0.26663	0.26663	0.26663	0.26663	0.26663	0.26663
3.0	0.0	0.0	0.0	0.0	0.0	0.0	0.0	0.0	0.0
3.1	-0.16105	-0.16105	-0.16105	-0.16105	-0.16105	-0.16105	-0.16105	-0.16105	-0.16105
3.2	-0.27801	-0.27801	-0.27801	-0.27801	-0.27801	-0.27801	-0.27801	-0.27801	-0.27801
3.3	-0.34868	-0.34868	-0.34868	-0.34868	-0.34868	-0.34868	-0.34868	-0.34868	-0.34868
3.4	-0.37710	-0.37710	-0.37710	-0.37710	-0.37710	-0.37710	-0.37710	-0.37710	-0.37710
3.5	-0.36929	-0.36929	-0.36929	-0.36929	-0.36929	-0.36929	-0.36929	-0.36929	-0.36929
3.6	-0.33130	-0.33130	-0.33130	-0.33130	-0.33130	-0.33130	-0.33130	-0.33130	-0.33130
3.7	-0.26917	-0.26917	-0.26917	-0.26917	-0.26917	-0.26917	-0.26917	-0.26917	-0.26917
3.8	-0.18892	-0.18892	-0.18892	-0.18892	-0.18892	-0.18892	-0.18892	-0.18892	-0.18892
3.9	-0.09699	-0.09699	-0.09699	-0.09699	-0.09699	-0.09699	-0.09699	-0.09699	-0.09699
AREA 1=	-0.04588	-0.04588	-0.04588	-0.04588	-0.04588	-0.04588	-0.04588	-0.04588	-0.04588
AREA 2=	0.49341	0.49341	0.49341	0.49341	0.49341	0.49341	0.49341	0.49341	0.49341
AREA 3=	-0.22027	-0.22027	-0.22027	-0.22027	-0.22027	-0.22027	-0.22027	-0.22027	-0.22027

WYOMING HIGHWAY DEPARTMENT
BRIDGE DIVISION
TENTH POINT SHEARS INFLUENCE LINES

DATE
PAGE NO. 38

SAMPLE PROBLEM FOR REINFORCED CONCRETE BOX GIRDER 585770 DXC4DES

LOAD POINT	V 9.1	V 9.2	V 9.3	V 9.4	V 9.5	V 9.6	V 9.7	V 9.8	V 9.9
8.0	0.0	0.0	0.0	0.0	0.0	0.0	0.0	0.0	0.0
8.1	0.01276	0.01276	0.01276	0.01276	0.01276	0.01276	0.01276	0.01276	0.01276
8.2	0.02152	0.02152	0.02152	0.02152	0.02152	0.02152	0.02152	0.02152	0.02152
8.3	0.02652	0.02652	0.02652	0.02652	0.02652	0.02652	0.02652	0.02652	0.02652
8.4	0.02805	0.02805	0.02805	0.02805	0.02805	0.02805	0.02805	0.02805	0.02805
8.5	0.02648	0.02648	0.02648	0.02648	0.02648	0.02648	0.02648	0.02648	0.02648
8.6	0.02231	0.02231	0.02231	0.02231	0.02231	0.02231	0.02231	0.02231	0.02231
8.7	0.01619	0.01619	0.01619	0.01619	0.01619	0.01619	0.01619	0.01619	0.01619
8.8	0.00893	0.00893	0.00893	0.00893	0.00893	0.00893	0.00893	0.00893	0.00893
8.9	0.00267	0.00267	0.00267	0.00267	0.00267	0.00267	0.00267	0.00267	0.00267
9.0	0.0	0.0	0.0	0.0	0.0	0.0	0.0	0.0	0.0
9.1	0.92774	-0.07226	-0.07226	-0.07226	-0.07226	-0.07226	-0.07226	-0.07226	-0.07226
9.2	0.83369	0.83369	-0.16631	-0.16631	-0.16631	-0.16631	-0.16631	-0.16631	-0.16631
9.3	0.72205	0.72205	0.72205	-0.27795	-0.27795	-0.27795	-0.27795	-0.27795	-0.27795
9.4	0.59772	0.59772	0.59772	0.59772	-0.40228	-0.40228	-0.40228	-0.40228	-0.40228
9.5	0.46640	0.46640	0.46640	0.46640	-0.53360	-0.53360	-0.53360	-0.53360	-0.53360
9.6	0.33484	0.33484	0.33484	0.33484	0.33484	-0.66516	-0.66516	-0.66516	-0.66516
9.7	0.21112	0.21112	0.21112	0.21112	0.21112	0.21112	-0.78888	-0.78888	-0.78888
9.8	0.10519	0.10519	0.10519	0.10519	0.10519	0.10519	0.10519	-0.89481	-0.89481
9.9	0.02947	0.02947	0.02947	0.02947	0.02947	0.02947	0.02947	0.02947	-0.97053
AREA 8=	0.00711	0.00711	0.00711	0.00711	0.00711	0.00711	0.00711	0.00711	0.00711
AREA 9=	0.37292	0.37292	0.17292	0.07292	-0.02718	-0.12718	-0.22718	-0.32718	-0.42718
1ST AREA=	-0.00361	-0.01554	-0.03775	-0.07177	-0.11856	-0.17850	-0.25120	-0.33538	-0.42865
SUM -	-0.26976	-0.28168	-0.30390	-0.33791	-0.41188	-0.57182	-0.74452	-0.92870	-1.1
SUM +	1.26978	1.06171	0.88392	0.71793	0.59190	0.55184	0.52454	0.50873	0.5
SUM T	0.98002	0.78002	0.58002	0.38002	0.18002	-0.01998	-0.21998	-0.41998	-0.6

SAMPLE PROBLEM FOR REINFORCED CONCRETE BOX GIRDER 585770 DXC4DES
INPUT AS RECEIVED BY COMPUTER

WORK CODE	DATA CODE	ENTRY 1	ENTRY 2	ENTRY 3	ENTRY 4	ENTRY 5	ENTRY 6
DC	2	11111.00000	6.00000	100.00000	0.0	0.0	0.0
	201	1.24000	0.15000	3300.00000	0.0	0.0	0.0
	202	0.0	8.00000	9.00000	0.0	0.0	0.0
	301	13.00000	4.00000	14.00000	16.00000	14.00000	16.0000
	302	30.00000	0.0	0.0	0.0	0.0	0.0
	309	0.32000	9.00000	13.00000	0.0	0.0	0.0
DC	5	10.00000	0.0	0.0	0.0	0.0	0.0

NOW CALLING 1BRSYS21

NOW CALLING 1BRSYS31

NOW CALLING 1BRSYS24

NOW CALLING 1BRSYS32

NOW CALLING 1BRSYS22

WYOMING HIGHWAY DEPARTMENT
BRIDGE DESIGN DIVISION

DATE
PAGE NO 40

SAMPLE PROBLEM FOR REINFORCED CONCRETE BOX GIRDER 585770 DXC4DES

** GIRDER MOMENTS, SHEARS, AND REACTIONS **

SPAN LENGTH OF NO. 1=100.00 FT
GIRDER WEIGHT= 7.26 KIPS/FT SUPERIMPOSED DEAD LOAD= 1.24 KIPS/FT E(MODULUS)= 3300 KIPS/SQ
LIVE LOAD WHEEL FRACTION= 6.00

	DEAD LOAD GIRDER			SUPERIMPOSED DEAD LOAD			POINT LOADING			
POINT	REACTION	SHEAR	MOMENT	REACTION	SHEAR	MOMENT	LOADING	REACTION	SHEAR	MOMEN
1.00	260.399	260.399	-0.00	41.355	41.355	-0.00		0.0	0.0	0.0
1.1		167.912	2240.83		28.955	351.55			0.0	0.0
1.2		95.276	3556.79		16.555	579.11			0.0	0.0
1.3		21.309	4146.38		4.155	632.66			0.0	0.0
1.4		-52.651	3996.32		-8.245	552.21			0.0	0.0
1.5		-126.630	3106.55		-20.645	517.77			0.0	0.0
1.6		-200.598	1477.10		-33.045	249.32			0.0	0.0
1.7		-274.567	-892.03		-45.445	-143.12			0.0	0.0
1.8		-348.535	-4000.56		-57.845	-650.57			0.0	0.0
1.9		-442.356	-7849.34		-70.245	-1300.01			0.0	0.0
2.00	1344.112	-514.031	-12636.07	170.350	-82.645	-2064.46		0.0	0.0	0.0

	TRUCK LOAD 1				TRUCK LOAD 2				TRUCK LOAD 3			
POINT	REACTION	SHEAR	+MOMENT	-MOMENT	REACTION	SHEAR	+MOMENT	-MOMENT	REACTION	SHEAR	+MOMENT	-MOMEN
1.00	231.336	231.336	0.00	-0.00	194.282	194.282	0.00	-0.00	0.0	0.0	0.0	0.0
1.1		196.764	1967.4	-250.19		158.072	1443.0	-270.23		0.0	0.0	0.0
1.2		163.214	3264.3	-500.39		122.031	2479.1	-540.45		0.0	0.0	0.0
1.3		131.273	3965.3	-750.57		86.377	3113.5	-810.68		0.0	0.0	0.0
1.4		-105.276	4190.1	-1000.76		-69.777	3361.1	-1080.91		0.0	0.0	0.0
1.5		-136.956	4011.8	-1250.95		-100.270	3241.3	-1351.13		0.0	0.0	0.0
1.6		-166.390	3451.1	-1470.96		-133.527	2778.9	-1588.74		0.0	0.0	0.0
1.7		-193.021	2540.3	-1716.09		-165.585	2004.4	-1853.53		0.0	0.0	0.0
1.8		-216.297	1411.3	-1961.25		-196.245	953.6	-2213.56		0.0	0.0	0.0
1.9		-235.751	276.6	-2206.40		-225.377	381.2	-3508.45		0.0	0.0	0.0
2.00	261.982	-251.217	240.80	-3235.88	441.671	-253.056	195.57	-5424.70	0.0	0.0	0.0	0.0

NOTE, -MOMENT IS A MOMENT THAT CAUSES TENSION ON THE OUTSIDE OF THE STRUCTURE

SAMPLE PROBLEM FOR REINFORCED CONCRETE BOX GIRDER 585770 DXC4DES

** GIRDER MOMENTS, SHEARS, AND REACTIONS **

SPAN LENGTH OF NO. 2=156.00 FT

GIRDER WEIGHT= 7.40 KIPS/FT SUPERIMPOSED DEAD LOAD= 1.24 KIPS/FT E(MODULUS)= 3300 KIPS/SQ IN

LIVE LOAD WHEEL FRACTION= 6.00

	DEAD LOAD GIRDER			SUPERIMPOSED DEAD LOAD			POINT LOADING			
POINT	REACTION	SHEAR	MOMENT	REACTION	SHEAR	MOMENT	LOADING	REACTION	SHEAR	MOMENT
2.0R	1344.112	604.497	-14983.55	179.359	96.714	-2432.21		0.0	0.0	0.0
2.1		461.626	-6353.45		77.371	-1074.35			0.0	0.0
2.2		346.235	-52.13		58.027	-18.26			0.0	0.0
2.3		230.845	4449.11		38.683	736.07			0.0	0.0
2.4		115.453	7150.25		19.339	1188.64			0.0	0.0
2.5		0.062	8051.30		-0.005	1339.44			0.0	0.0
2.6		-115.329	7152.25		-19.349	1188.47			0.0	0.0
2.7		-230.720	4453.11		-38.693	735.74			0.0	0.0
2.8		-346.111	-46.12		-58.037	-18.76			0.0	0.0
2.9		-491.061	-6345.44		-77.381	-1075.02			0.0	0.0
3.0L	1298.847	-606.453	-14906.01	173.177	-96.725	-2433.05		0.0	0.0	0.0

	TRUCK LOAD 1				TRUCK LOAD 2				TRUCK LOAD 3			
POINT	REACTION	SHEAR	+MOMENT	-MOMENT	REACTION	SHEAR	+MOMENT	-MOMENT	REACTION	SHEAR	+MOMENT	-MOMENT
2.0R	252.490	244.977	437.56	-4622.26	425.667	273.660	355.37	-6333.72	0.0	0.0	0.0	0.0
2.1		226.084	651.0	-2185.77		193.472	503.7	-3060.51		0.0	0.0	0.0
2.2		200.804	2125.7	-1116.37		152.984	1354.9	-1087.84		0.0	0.0	0.0
2.3		170.602	3509.9	-893.03		120.290	2957.9	-784.52		0.0	0.0	0.0
2.4		137.565	4394.9	-669.69		86.093	3968.5	-719.37		0.0	0.0	0.0
2.5		-110.378	4633.6	-446.35		-54.470	4267.2	-654.22		0.0	0.0	0.0
2.6		-144.086	4272.9	-491.13		-89.270	3841.0	-590.83		0.0	0.0	0.0
2.7		-176.626	3282.9	-647.35		-123.169	2711.7	-525.76		0.0	0.0	0.0
2.8		-205.782	1854.5	-803.57		-155.366	1066.1	-851.10		0.0	0.0	0.0
2.9		-229.482	529.7	-2519.41		-185.171	563.0	-3187.74		0.0	0.0	0.0
3.0L	253.207	-246.323	659.31	-5160.54	417.993	-276.698	565.78	-6531.03	0.0	0.0	0.0	0.0

NOTE, -MOMENT IS A MOMENT THAT CAUSES TENSION ON THE OUTSIDE OF THE STRUCTURE

SAMPLE PROBLEM FOR REINFORCED CONCRETE BOX GIRDER 585770 DXC4DES

** GIRDER MOMENTS, SHEARS, AND REACTIONS **

SPAN LENGTH OF NO. 3= 91.00 FT
GIRDER WEIGHT= 7.40 KIPS/FT SUPERIMPOSED DEAD LOAD= 1.24 KIPS/FT E(MODULUS)= 3300 KIPS/SQ IN
LIVE LOAD WHEEL FRACTION= 6.00

	DEAD LOAD GIRDER			SUPERIMPOSED DEAD LOAD			POINT LOADING			
POINT	REACTION	SHEAR	MOMENT	REACTION	SHEAR	MOMENT	LOADING	REACTION	SHEAR	MOMENT
3.0R	1298.847	476.310	-11170.00	173.177	76.452	-1822.91		0.0	0.0	0.0
3.1		392.113	-7141.82		65.168	-1178.54			0.0	0.0
3.2		324.801	-3879.88		53.884	-636.85			0.0	0.0
3.3		257.490	-1230.43		42.600	-197.85			0.0	0.0
3.4		190.178	806.47		31.316	138.46			0.0	0.0
3.5		122.867	2230.84		20.032	372.10			0.0	0.0
3.6		55.555	3042.69		8.748	503.05			0.0	0.0
3.7		-11.756	3241.99		-2.536	531.31			0.0	0.0
3.8		-79.068	2828.76		-13.820	456.89			0.0	0.0
3.9		-164.479	1803.00		-25.104	279.79			0.0	0.0
4.0L	231.790	-231.790	-0.00	36.388	-36.388	-0.00		0.0	0.0	0.0

	TRUCK LOAD 1				TRUCK LOAD 2				TRUCK LOAD 3			
POINT	REACTION	SHEAR	+MOMENT	-MOMENT	REACTION	SHEAR	+MOMENT	-MOMENT	REACTION	SHEAR	+MOMENT	-MOMENT
3.0R	264.717	252.364	295.69	-3122.35	436.994	243.774	253.74	-4948.71	0.0	0.0	0.0	0.0
3.1		237.123	266.1	-1992.38		228.799	378.6	-3283.91		0.0	0.0	0.0
3.2		217.629	1105.8	-1771.00		199.708	773.6	-2046.74		0.0	0.0	0.0
3.3		194.077	2135.1	-1549.63		168.972	1674.9	-1688.99		0.0	0.0	0.0
3.4		166.972	2978.5	-1328.25		136.733	2347.9	-1447.71		0.0	0.0	0.0
3.5		136.910	3508.1	-1106.88		103.205	2757.4	-1206.42		0.0	0.0	0.0
3.6		104.490	3686.1	-907.82		71.053	2873.7	-989.46		0.0	0.0	0.0
3.7		-127.634	3513.4	-680.87		-85.702	2672.3	-742.10		0.0	0.0	0.0
3.8		-159.953	2911.1	-453.91		-121.806	2134.3	-494.73		0.0	0.0	0.0
3.9		-194.053	1765.9	-226.96		-158.326	1246.2	-247.37		0.0	0.0	0.0
4.0L	229.307	-229.307	0.00	-0.00	186.293	-186.292	0.00	-0.00	0.0	0.0	0.0	0.0

NOTE, -MOMENT IS A MOMENT THAT CAUSES TENSION ON THE OUTSIDE OF THE STRUCTURE

SAMPLE PROBLEM FOR REINFORCED CONCRETE BOX GIRDER 585770 DXC4DES

** GIRDER MOMENTS, SHEARS, AND REACTIONS **

SPAN LENGTH OF NO. 8= 43.00 FT

GIRDER WEIGHT= 0.0 KIPS/FT SUPERIMPOSED DEAD LOAD= 0.0 KIPS/FT E(MODULUS)= 3300 KIPS/SQ IN

LIVE LOAD WHEEL FRACTION= 6.00

	DEAD LOAD GIRDER			SUPERIMPOSED DEAD LOAD			POINT LOADING			
POINT	REACTION	SHEAR	MOMENT	REACTION	SHEAR	MOMENT	LOADING	REACTION	SHEAR	MOMENT
8.0R	63.141	-63.141	2247.49	10.332	-10.332	367.75		0.0	0.0	0.0
8.1		-63.141	1975.99		-10.332	323.33			0.0	0.0
8.2		-63.141	1704.48		-10.332	278.90			0.0	0.0
8.3		-63.141	1432.97		-10.332	234.48			0.0	0.0
8.4		-63.141	1161.46		-10.332	190.05			0.0	0.0
8.5		-63.141	889.95		-10.332	145.62			0.0	0.0
8.6		-63.141	618.45		-10.332	101.20			0.0	0.0
8.7		-63.141	346.94		-10.332	56.77			0.0	0.0
8.8		-63.141	75.44		-10.332	12.34			0.0	0.0
8.9		-63.141	-196.07		-10.332	-32.08			0.0	0.0
9.0L	63.141	-63.141	-467.58	10.332	-10.332	-76.51		0.0	0.0	0.0

	TRUCK LOAD 1				TRUCK LOAD 2				TRUCK LOAD 3			
POINT	REACTION	SHEAR	+MOMENT	-MOMENT	REACTION	SHEAR	+MOMENT	-MOMENT	REACTION	SHEAR	+MOMENT	-MOMENT
8.0R	-66.075	-66.075	2351.93	-1815.82	-78.806	-78.806	2540.28	-1742.40	0.251	0.251	0.25	0.25
8.1		-66.075	2067.8	-1596.46		-78.806	2233.4	-1531.91		0.251	0.3	0.25
8.2		-66.075	1783.7	-1377.10		-78.806	1926.5	-1321.42		0.251	0.3	0.25
8.3		-66.075	1499.6	-1157.74		-78.806	1619.6	-1110.93		0.251	0.3	0.25
8.4		-66.075	1215.4	-938.38		-78.806	1312.8	-900.44		0.251	0.3	0.25
8.5		-66.075	931.3	-719.03		-78.806	1005.9	-689.95		0.251	0.3	0.25
8.6		-66.075	647.2	-498.75		-78.806	699.0	-478.58		0.251	0.3	0.25
8.7		-66.075	363.1	-279.79		-78.806	392.1	-268.48		0.251	0.3	0.25
8.8		-66.075	78.9	-60.84		-78.806	85.3	-58.38		0.251	0.3	0.25
8.9		-66.075	158.1	-205.18		-78.806	146.5	-221.61		0.251	0.3	0.25
9.0L	66.075	-66.075	377.08	-489.31	78.806	-78.806	349.41	-528.50	0.251	0.251	0.25	0.25

NOTE, -MOMENT IS A MOMENT THAT CAUSES TENSION ON THE OUTSIDE OF THE STRUCTURE

SAMPLE PROBLEM FOR REINFORCED CONCRETE BOX GIRDER 585770 DXC4DES

** GIRDER MOMENTS, SHEARS, AND REACTIONS **

SPAN LENGTH OF NO. 9= 30.00 FT

GIRDER WEIGHT= 0.0 KIPS/FT SUPERIMPOSED DEAD LOAD= 0.0 KIPS/FT E(MODULUS)= 3300 KIPS/SQ IN

LIVE LOAD WHEEL FRACTION= 6.00

	DEAD LOAD GIRDER			SUPERIMPOSED DEAD LOAD			POINT LOADING			
POINT	REACTION	SHEAR	MOMENT	REACTION	SHEAR	MOMENT	LOADING	REACTION	SHEAR	MOMENT
9.0R	-172.556	172.556	-3736.02	-28.181	28.181	-610.14		0.0	0.0	0.0
9.1		172.556	-3218.34		28.181	-525.60			0.0	0.0
9.2		172.556	-2700.68		28.181	-441.06			0.0	0.0
9.3		172.556	-2183.01		28.181	-356.52			0.0	0.0
9.4		172.556	-1665.35		28.181	-271.97			0.0	0.0
9.5		172.556	-1147.68		28.181	-187.43			0.0	0.0
9.6		172.556	-630.01		28.181	-102.89			0.0	0.0
9.7		172.556	-112.35		28.181	-18.35			0.0	0.0
9.8		172.556	405.32		28.181	66.19			0.0	0.0
9.9		172.556	922.99		28.181	150.74			0.0	0.0
10.0L	-172.556	172.556	1440.66	-28.181	28.181	235.28		0.0	0.0	0.0

	TRUCK LOAD 1				TRUCK LOAD 2				TRUCK LOAD 3			
POINT	REACTION	SHEAR	+MOMENT	-MOMENT	REACTION	SHEAR	+MOMENT	-MOMENT	REACTION	SHEAR	+MOMENT	-MOMENT
9.0R	147.298	147.298	2171.33	-3189.14	177.162	177.162	2011.41	-3475.95	0.251	0.251	0.25	0.25
9.1		147.298	1870.5	-2747.25		177.162	1732.7	-2994.31		0.251	0.3	0.25
9.2		147.298	1569.6	-2305.35		177.162	1454.0	-2512.68		0.251	0.3	0.25
9.3		147.298	1268.7	-1863.46		177.162	1175.3	-2031.05		0.251	0.3	0.25
9.4		147.298	967.9	-1421.57		177.162	896.6	-1549.42		0.251	0.3	0.25
9.5		147.298	667.0	-979.68		177.162	617.9	-1067.78		0.251	0.3	0.25
9.6		147.298	366.1	-537.78		177.162	339.2	-586.15		0.251	0.3	0.25
9.7		147.298	65.3	-95.89		177.162	60.5	-104.52		0.251	0.3	0.25
9.8		147.298	346.0	-235.58		177.162	377.1	-230.02		0.251	0.3	0.25
9.9		147.298	787.9	-536.45		177.162	858.8	-523.77		0.251	0.3	0.25
10.0L	-147.298	147.298	1229.79	-837.32	-177.162	177.162	1340.39	-817.53	0.251	0.251	0.25	0.25

NOTE, -MOMENT IS A MOMENT THAT CAUSES TENSION ON THE OUTSIDE OF THE STRUCTURE

SAMPLE PROBLEM FOR REINFORCED CONCRETE BOX GIRDER 585770 DXC4DES

** MAXIMUM MOMENTS, SHEARS, REACTIONS, & DEFLECTIONS **

SPAN LENGTH OF NO. 1=100.00 FT

GIRDER WEIGHT= 7.26 KIPS/FT SUPERIMPOSED DEAD LOAD= 1.24 KIPS/FT E(MODULUS)= 3300 KIPS/SQ IN

DESIGN VALUES

	1.0R	1.1	1.2	1.3	1.4	1.5	1.6	1.7	1.8	1.9	2.0L
REACTION	533.1										1949.1
SHEAR	533.1	393.6	275.0	156.7	-166.2	-284.2	-400.0	-513.0	-622.7	-748.4	-850.7
+MOMENTS	-0.0	4560.0	7400.2	8794.3	8848.6	7636.1	5177.6	1505.1	-3249.2	-8768.1	+14459.7
-MOMENTS	-0.0	2322.2	3595.4	4018.4	3577.6	2273.2	137.7	-2888.7	-6874.0	+12657.8	+20125.2

DEFLECTIONS (MAX. ALLOWABLE LIVE LOAD DEF.=L/800= 0.1250 FT.)

		1.0R	1.1	1.2	1.3	1.4	1.5	1.6	1.7	1.8	1.9	2.0L
DEAD	DEC FT	0.0	0.009	0.016	0.021	0.021	0.018	0.013	0.005	-0.001	-0.003	0.0
LOAD	ERA IN	0 0/16	0 2/16	0 3/16	0 4/16	0 4/16	0 4/16	0 2/16	0 1/16	- 0 0/16	- 0 0/16	0 0/16
TRUCK	FT	0.0	0.009	0.016	0.022	0.025	0.025	0.023	0.018	0.012	0.005	0.0
LANELOAD		0.0	0.007	0.014	0.019	0.021	0.022	0.020	0.016	0.010	0.005	0.0
MILITARY		0.0	0.0	0.0	0.0	0.0	0.0	0.0	0.0	0.0	0.0	0.0

SPAN LENGTH OF NO. 2=156.00 FT

GIRDER WEIGHT= 7.40 KIPS/FT SUPERIMPOSED DEAD LOAD= 1.24 KIPS/FT E(MODULUS)= 3300 KIPS/SQ IN

DESIGN VALUES

	2.0R	2.1	2.2	2.3	2.4	2.5	2.6	2.7	2.8	2.9	3.0L
REACTION	1949.1										1909.0
SHEAR	974.9	765.1	605.1	440.1	272.4	-110.3	-278.8	-446.0	-609.9	-797.9	-979.9
+MOMENTS	-16878.2	-6776.8	2055.4	8695.0	12733.8	14024.3	12613.7	8471.8	1789.6	-6857.5	+16679.7
-MOMENTS	-23649.5	+10489.3	-1186.7	4202.1	7619.5	8736.5	7749.9	4541.5	-916.0	+10608.2	+23870.1

DEFLECTIONS (MAX. ALLOWABLE LIVE LOAD DEF.=L/800= 0.1950 FT.)

		2.0R	2.1	2.2	2.3	2.4	2.5	2.6	2.7	2.8	2.9	3.0L
DEAD	DEC FT	0.0	0.021	0.055	0.088	0.113	0.121	0.113	0.088	0.055	0.021	0.0
LOAD	ERA IN	0 0/16	0 4/16	0 10/16	1 1/16	1 6/16	1 7/16	1 6/16	1 1/16	0 11/16	0 4/16	0 0/16
TRUCK	FT	0.0	0.012	0.026	0.040	0.050	0.053	0.049	0.039	0.024	0.010	0.0
LANELOAD		0.0	0.013	0.028	0.043	0.052	0.056	0.051	0.041	0.026	0.011	0.0
MILITARY		0.0	0.0	0.0	0.0	0.0	0.0	0.0	0.0	0.0	0.0	0.0

NOTE, -MOMENT IS A MOMENT THAT CAUSES TENSION ON THE OUTSIDE OF THE STRUCTURE

SAMPLE PROBLEM FOR REINFORCED CONCRETE BOX GIRDER 585770 DXC4DES

** MAXIMUM MOMENTS, SHEARS, REACTIONS, & DEFLECTIONS **

SPAN LENGTH OF NO. 3= 91.00 FT

GIRDER WEIGHT= 7.40 KIPS/FT SUPERIMPOSED DEAD LOAD= 1.24 KIPS/FT E(MODULUS)= 3300 KIPS/SQ IN

DESIGN VALUES

	3.0R	3.1	3.2	3.3	3.4	3.5	3.6	3.7	3.8	3.9	4.0L
REACTION	1909.0										497.5
SHEAR	805.1	694.4	596.3	494.2	388.5	279.8	168.8	-141.9	-252.8	-383.6	-497.5
+MOMENTS	-12697.2	-7941.7	-3410.9	706.8	3923.4	6111.1	7231.8	7286.7	6196.8	3848.7	-0.0
-MOMENTS	-17941.6	+11604.3	-6563.5	-3117.3	-502.8	1396.5	2556.3	3031.2	2790.9	1835.4	-0.0

DEFLECTIONS (MAX. ALLOWABLE LIVE LOAD DEF.=L/800= 0.1137 FT.)

	3.0R	3.1	3.2	3.3	3.4	3.5	3.6	3.7	3.8	3.9	4.0L
DEAD DEC	0.0	-0.004	-0.003	0.001	0.005	0.009	0.012	0.012	0.010	0.005	0.0
FT											
LOAD FRA	0 0/16	- 0 0/16	- 0 0/16	0 0/16	0 1/16	0 2/16	0 2/16	0 2/16	0 2/16	0 1/16	0 0/16
IN											
TRUCK FT	0.0	0.004	0.008	0.013	0.016	0.018	0.018	0.016	0.012	0.006	0.0
LANELOAD	0.0	0.003	0.007	0.011	0.014	0.015	0.015	0.013	0.010	0.005	0.0
MILITARY	0.0	0.0	0.0	0.0	0.0	0.0	0.0	0.0	0.0	0.0	0.0

SPAN LENGTH OF NO. 8= 43.00 FT

GIRDER WEIGHT= 0.0 KIPS/FT SUPERIMPOSED DEAD LOAD= 0.0 KIPS/FT E(MODULUS)= 3300 KIPS/SQ IN

DESIGN VALUES

	8.0R	8.1	8.2	8.3	8.4	8.5	8.6	8.7	8.8	8.9	9.0L
REACTION	73.7										-23.6
SHEAR	-152.3	-152.3	-152.3	-152.3	-152.3	-152.3	-152.3	-152.3	-152.3	-152.3	-152.3
+MOMENTS	5155.5	4532.7	3900.0	3287.1	2664.3	2041.5	1418.7	795.9	173.0	-70.0	-167.0
-MOMENTS	799.4	702.9	606.3	509.7	413.1	316.6	220.0	123.9	26.9	-449.8	-1072.6

DEFLECTIONS (MAX. ALLOWABLE LIVE LOAD DEF.=L/800= 0.0537 FT.)

	8.0R	8.1	8.2	8.3	8.4	8.5	8.6	8.7	8.8	8.9	9.0L
DEAD DEC	0.0	0.003	0.005	0.006	0.007	0.007	0.006	0.005	0.003	0.002	0.0
FT											
LOAD FRA	0 0/16	0 1/16	0 1/16	0 1/16	0 1/16	0 1/16	0 1/16	0 1/16	0 1/16	0 0/16	0 0/16
IN											
TRUCK FT	0.0	0.0	0.0	0.0	0.0	0.0	0.0	0.0	0.0	0.0	0.0
LANELOAD	0.0	0.0	0.0	0.0	0.0	0.0	0.0	0.0	0.0	0.0	0.0
MILITARY	0.0	0.0	0.0	0.0	0.0	0.0	0.0	0.0	0.0	0.0	0.0

NOTE, -MOMENT IS A MOMENT THAT CAUSES TENSION ON THE OUTSIDE OF THE STRUCTURE

WYOMING HIGHWAY DEPARTMENT
BRIDGE DESIGN DIVISION

DATE
PAGE NO 47

SAMPLE PROBLEM FOR REINFORCED CONCRETE BOX GIRDER 585770 DXC4DES

** MAXIMUM MOMENTS, SHEARS, REACTIONS, & DEFLECTIONS **

SPAN LENGTH OF NO. 9= 30.00 FT

GIRDER WEIGHT= 0.0 KIPS/FT SUPERIMPOSED DEAD LOAD= 0.0 KIPS/FT E(MODULUS)= 3300 KIPS/SQ IN

DESIGN VALUES

	9.0R	9.1	9.2	9.3	9.4	9.5	9.6	9.7	9.8	9.9	10.0L
REACTION	-23.6										-200.5
SHEAR	377.9	377.9	377.9	377.9	377.9	377.9	377.9	377.9	377.9	377.9	377.9
+MOMENTS	-2174.8	-1873.5	-1572.1	-1270.8	-969.4	-668.1	-366.8	-65.4	848.6	1932.5	3016.3
-MOMENTS	-7822.1	-6738.3	-5654.4	-4570.6	-3486.7	-2402.9	-1319.1	-235.2	235.9	537.3	838.6

DEFLECTIONS (MAX. ALLOWABLE LIVE LOAD DEF.=L/800= 0.0375 FT.)

		9.0R	9.1	9.2	9.3	9.4	9.5	9.6	9.7	9.8	9.9	10.0L
DEAD	DEC FT	0.0	-0.002	-0.003	-0.004	-0.004	-0.003	-0.003	-0.002	-0.001	-0.000	0.0
LOAD	FRA IN	0 0/16	- 0 0/16	- 0 0/16	- 0 0/16	- 0 0/16	- 0 0/16	- 0 0/16	- 0 0/16	- 0 0/16	- 0 0/16	0 0/16
TRUCK	FT	0.0	0.0	0.0	0.0	0.0	0.0	0.0	0.0	0.0	0.0	0.0
LANELOAD		0.0	0.0	0.0	0.0	0.0	0.0	0.0	0.0	0.0	0.0	0.0
MILITARY		0.0	0.0	0.0	0.0	0.0	0.0	0.0	0.0	0.0	0.0	0.0

NOW CALLING 1BRSYS33

WYOMING HIGHWAY DEPARTMENT
BRIDGE DIVISION
DEFLECTIONS INFLUENCE LINES

DATE
PAGE NO. 48

SAMPLE PROBLEM FOR REINFORCED CONCRETE BOX GIRDER 585770 DXC4DES

LOAD POINTS	DEF@ 1.1	DEF@ 1.2	DEF@ 1.3	DEF@ 1.4	DEF@ 1.5
1.1	0.000194	0.000331	0.000400	0.000413	0.000381
1.2	0.000331	0.000605	0.000753	0.000787	0.000733
1.3	0.000400	0.000753	0.000992	0.001071	0.001015
1.4	0.000413	0.000787	0.001071	0.001218	0.001192
1.5	0.000381	0.000733	0.001015	0.001192	0.001228
1.6	0.000318	0.000615	0.000861	0.001032	0.001100
1.7	0.000236	0.000458	0.000647	0.000785	0.000855
1.8	0.000148	0.000288	0.000410	0.000501	0.000553
1.9	0.000067	0.000130	0.000184	0.000227	0.000252
AREA 1	0.000249	0.000470	0.000633	0.000723	0.000731

	DEF@ 1.6	DEF@ 1.7	DEF@ 1.8	DEF@ 1.9		UNIT MOM. 1.0R	UNIT MOM. 2.0L
1.1	0.000318	0.000236	0.000148	0.000066	DEF@ 1.1	0.000025	0.000015
1.2	0.000615	0.000458	0.000288	0.000129	DEF@ 1.2	0.000044	0.000030
1.3	0.000861	0.000647	0.000409	0.000184	DEF@ 1.3	0.000055	0.000042
1.4	0.001031	0.000784	0.000500	0.000226	DEF@ 1.4	0.000059	0.000052
1.5	0.001100	0.000855	0.000552	0.000252	DEF@ 1.5	0.000058	0.000058
1.6	0.001040	0.000840	0.000556	0.000256	DEF@ 1.6	0.000052	0.000059
1.7	0.000840	0.000724	0.000500	0.000236	DEF@ 1.7	0.000042	0.000055
1.8	0.000557	0.000501	0.000377	0.000186	DEF@ 1.8	0.000030	0.000044
1.9	0.000257	0.000236	0.000186	0.000104	DEF@ 1.9	0.000015	0.000025
AREA 1	0.000662	0.000528	0.000352	0.000164			

WYOMING HIGHWAY DEPARTMENT
BRIDGE DIVISION
DEFLECTIONS INFLUENCE LINES

DATE
PAGE NO. 49

SAMPLE PROBLEM FOR REINFORCED CONCRETE BOX GIRDER 585770 DXC4DES

LOAD POINTS	DEF@ 2.1	DEF@ 2.2	DEF@ 2.3	DEF@ 2.4	DEF@ 2.5
2.1	0.000264	0.000459	0.000552	0.000560	0.000505
2.2	0.000460	0.000949	0.001220	0.001278	0.001173
2.3	0.000552	0.001219	0.001762	0.001960	0.001857
2.4	0.000559	0.001274	0.001958	0.002390	0.002392
2.5	0.000504	0.001169	0.001856	0.002392	0.002602
2.6	0.000407	0.000954	0.001545	0.002055	0.002356
2.7	0.000288	0.000681	0.001117	0.001517	0.001795
2.8	0.000169	0.000401	0.000664	0.000913	0.001103
2.9	0.000068	0.000161	0.000269	0.000373	0.000456
AREA 2	0.000510	0.001134	0.001707	0.002096	0.002221

	DEF@ 2.6	DEF@ 2.7	DEF@ 2.8	DEF@ 2.9		UNIT MOM. 2.0R	UNIT MOM. 3.0L
2.1	0.000408	0.000289	0.000168	0.000068	DEF@ 2.1	0.000062	0.000037
2.2	0.000957	0.000682	0.000401	0.000161	DEF@ 2.2	0.000107	0.000072
2.3	0.001546	0.001117	0.000662	0.000268	DEF@ 2.3	0.000134	0.000103
2.4	0.002055	0.001515	0.000910	0.000372	DEF@ 2.4	0.000144	0.000127
2.5	0.002356	0.001794	0.001100	0.000454	DEF@ 2.5	0.000141	0.000141
2.6	0.002322	0.001869	0.001185	0.000499	DEF@ 2.6	0.000127	0.000144
2.7	0.001870	0.001658	0.001121	0.000488	DEF@ 2.7	0.000103	0.000134
2.8	0.001189	0.001123	0.000861	0.000404	DEF@ 2.8	0.000072	0.000107
2.9	0.000500	0.000489	0.000403	0.000229	DEF@ 2.9	0.000037	0.000062
AREA 2	0.002060	0.001644	0.001062	0.000459			

WYOMING HIGHWAY DEPARTMENT
BRIDGE DIVISION
DEFLECTIONS INFLUENCE LINES

DATE
PAGE NO. 50

SAMPLE PROBLEM FOR REINFORCED CONCRETE BOX GIRDER 585770 DXC4DES

LOAD POINTS	DEF@ 3.1	DEF@ 3.2	DEF@ 3.3	DEF@ 3.4	DEF@ 3.5
3.1	0.000071	0.000128	0.000162	0.000176	0.000173
3.2	0.000128	0.000262	0.000350	0.000390	0.000388
3.3	0.000162	0.000350	0.000512	0.000597	0.000608
3.4	0.000176	0.000389	0.000596	0.000744	0.000790
3.5	0.000173	0.000388	0.000608	0.000790	0.000887
3.6	0.000156	0.000351	0.000559	0.000742	0.000864
3.7	0.000127	0.000287	0.000461	0.000621	0.000737
3.8	0.000089	0.000202	0.000327	0.000443	0.000533
3.9	0.000046	0.000104	0.000168	0.000229	0.000277
AREA 3	0.000103	0.000224	0.000341	0.000431	0.000478

	DEF@ 3.6	DEF@ 3.7	DEF@ 3.8	DEF@ 3.9		UNIT MOM. 3.0R	UNIT MOM. 4.0L
3.1	0.000156	0.000127	0.000089	0.000046	DEF@ 3.1	0.000021	0.000013
3.2	0.000352	0.000288	0.000203	0.000104	DEF@ 3.2	0.000036	0.000025
3.3	0.000559	0.000461	0.000327	0.000168	DEF@ 3.3	0.000045	0.000035
3.4	0.000742	0.000621	0.000443	0.000229	DEF@ 3.4	0.000049	0.000043
3.5	0.000864	0.000737	0.000532	0.000277	DEF@ 3.5	0.000048	0.000048
3.6	0.000887	0.000782	0.000575	0.000302	DEF@ 3.6	0.000043	0.000049
3.7	0.000782	0.000727	0.000553	0.000294	DEF@ 3.7	0.000035	0.000045
3.8	0.000575	0.000553	0.000445	0.000244	DEF@ 3.8	0.000025	0.000036
3.9	0.000302	0.000294	0.000244	0.000144	DEF@ 3.9	0.000013	0.000021
AREA 3	0.000475	0.000418	0.000310	0.000165			

WYOMING HIGHWAY DEPARTMENT
BRIDGE DIVISION
DEFLECTIONS INFLUENCE LINES

DATE
PAGE NO. 51

SAMPLE PROBLEM FOR REINFORCED CONCRETE BOX GIRDER 585770 DXC4DES

LOAD POINTS	DEF@ 8.1	DEF@ 8.2	DEF@ 8.3	DEF@ 8.4	DEF@ 8.5
8.1	0.000022	0.000039	0.000049	0.000054	0.000053
8.2	0.000039	0.000078	0.000105	0.000117	0.000116
8.3	0.000048	0.000104	0.000152	0.000177	0.000179
8.4	0.000051	0.000113	0.000175	0.000220	0.000232
8.5	0.000049	0.000110	0.000174	0.000229	0.000259
8.6	0.000042	0.000094	0.000152	0.000206	0.000245
8.7	0.000031	0.000071	0.000116	0.000161	0.000198
8.8	0.000017	0.000040	0.000065	0.000092	0.000116
8.9	0.000005	0.000012	0.000020	0.000029	0.000036
AREA 8	0.000013	0.000028	0.000043	0.000055	0.000062

	DEF@ 8.6	DEF@ 8.7	DEF@ 8.8	DEF@ 8.9
8.1	0.000047	0.000037	0.000024	0.000010
8.2	0.000103	0.000080	0.000050	0.000020
8.3	0.000161	0.000126	0.000077	0.000029
8.4	0.000213	0.000169	0.000104	0.000038
8.5	0.000249	0.000204	0.000126	0.000045
8.6	0.000255	0.000221	0.000140	0.000050
8.7	0.000219	0.000212	0.000143	0.000052
8.8	0.000133	0.000137	0.000109	0.000043
8.9	0.000043	0.000046	0.000041	0.000023
AREA 8	0.000061	0.000053	0.000035	0.000013

	UNIT MOM. 8.0R	UNIT MOM. 9.0L
DEF@ 8.1	0.000017	0.000016
DEF@ 8.2	0.000030	0.000031
DEF@ 8.3	0.000039	0.000045
DEF@ 8.4	0.000044	0.000058
DEF@ 8.5	0.000046	0.000068
DEF@ 8.6	0.000044	0.000075
DEF@ 8.7	0.000039	0.000076
DEF@ 8.8	0.000029	0.000066
DEF@ 8.9	0.000016	0.000042

WYOMING HIGHWAY DEPARTMENT
BRIDGE DIVISION
DEFLECTIONS INFLUENCE LINES

DATE
PAGE NO. 52

SAMPLE PROBLEM FOR REINFORCED CONCRETE BOX GIRDER 585770 DXC4DES

LOAD POINTS	DEF@ 9.1	DEF@ 9.2	DEF@ 9.3	DEF@ 9.4	DEF@ 9.5
9.1	0.000007	0.000012	0.000015	0.000015	0.000014
9.2	0.000012	0.000024	0.000031	0.000033	0.000031
9.3	0.000015	0.000031	0.000044	0.000049	0.000047
9.4	0.000015	0.000033	0.000049	0.000059	0.000059
9.5	0.000014	0.000031	0.000047	0.000059	0.000064
9.6	0.000011	0.000025	0.000039	0.000051	0.000058
9.7	0.000009	0.000018	0.000028	0.000037	0.000043
9.8	0.000004	0.000010	0.000015	0.000020	0.000025
9.9	0.000001	0.000003	0.000005	0.000006	0.000008
AREA 9	0.000003	0.000006	0.000008	0.000010	0.000010

	DEF@ 9.6	DEF@ 9.7	DEF@ 9.8	DEF@ 9.9		UNIT MOM. 9.0R	UNIT MOM.10.0L
9.1	0.000011	0.000008	0.000004	0.000001	DEF@ 9.1	0.000007	0.000005
9.2	0.000025	0.000018	0.000010	0.000003	DEF@ 9.2	0.000012	0.000009
9.3	0.000039	0.000028	0.000015	0.000005	DEF@ 9.3	0.000015	0.000014
9.4	0.000051	0.000037	0.000020	0.000006	DEF@ 9.4	0.000017	0.000017
9.5	0.000058	0.000043	0.000025	0.000008	DEF@ 9.5	0.000017	0.000019
9.6	0.000057	0.000045	0.000026	0.000009	DEF@ 9.6	0.000015	0.000020
9.7	0.000045	0.000039	0.000025	0.000008	DEF@ 9.7	0.000013	0.000020
9.8	0.000026	0.000025	0.000019	0.000007	DEF@ 9.8	0.000009	0.000016
9.9	0.000009	0.000008	0.000007	0.000004	DEF@ 9.9	0.000005	0.000010
AREA 9	0.000010	0.000008	0.000005	0.000002			

& S CK O O &> D - C8 C O & 1 1 * D & 1-

WORK CODE	DATA CODE	ENTRY 1	ENTRY 2	ENTRY 3	ENTRY 4	ENTRY 5	ENTRY
DC	5	10.00000	0.0	0.0	0.0	0.0	0.0
	501	0.40000	0.40000	0.40000	0.0	0.0	0.0
	502	0.55000	0.55000	0.55000	0.0	0.0	0.0
	510	1.00000	3.00000	2.00000	3.00000	3.00000	3.0000
	510	4.00000	3.00000	5.00000	3.00000	6.00000	3.0000
	520	100.00000	104.00000	110.00000	200.00000	205.00000	210.0000
	520	300.00000	306.00000	800.00000	807.00000	900.00000	1000.0000
	550	100.00000	60000.00000	40000.00000	3250.00000	100.00000	10.0000
	551	2.00000	3.50000	0.0	0.0	0.0	0.0
	550	104.00000	60000.00000	40000.00000	3250.00000	100.00000	10.0000
	551	2.00000	3.50000	0.0	0.0	0.0	0.0
	550	110.00000	60000.00000	40000.00000	3250.00000	100.00000	10.0000
	551	2.00000	3.50000	0.0	0.0	0.0	0.0
	550	200.00000	60000.00000	40000.00000	3250.00000	100.00000	10.0000
	551	2.00000	3.50000	0.0	0.0	0.0	0.0
	550	205.00000	60000.00000	40000.00000	3250.00000	100.00000	10.0000
	551	2.00000	3.50000	0.0	0.0	0.0	0.0
	550	210.00000	60000.00000	40000.00000	3250.00000	100.00000	10.0000
	551	2.00000	3.50000	0.0	0.0	0.0	0.0
	550	300.00000	60000.00000	40000.00000	3250.00000	100.00000	10.0000
	551	2.00000	3.50000	0.0	0.0	0.0	0.0
	550	306.00000	60000.00000	40000.00000	3250.00000	100.00000	10.0000
	551	2.00000	3.50000	0.0	0.0	0.0	0.0
	550	800.00000	60000.00000	40000.00000	3250.00000	100.00000	10.0000
	551	4.00000	4.00000	0.0	0.0	0.0	0.0
	550	807.00000	60000.00000	40000.00000	3250.00000	100.00000	10.0000
	551	4.00000	4.00000	0.0	0.0	0.0	0.0
	550	900.00000	60000.00000	40000.00000	3250.00000	100.00000	10.0000
	551	4.00000	4.00000	0.0	0.0	0.0	0.0
	550	1000.00000	60000.00000	40000.00000	3250.00000	100.00000	10.0000
	551	4.00000	4.00000	0.0	0.0	0.0	0.0

SAMPLE PROBLEM FOR REINFORCED CONCRETE BOX GIRDER 585770 DXC4DES

REINFORCING CONCRETE SECTION DESIGN

SPAN 1 @ 0 TENTH POINT

INPUT SECTION DIMENSIONS

DEPTH SECTION	62.50	TOP FLANGE THICKNESS	9.00	BOTTOM FLANGE THICKNESS	0.0
THICKNESS WEB	300.00	TOP FLANGE WIDTH	536.00	BOTTOM FLANGE WIDTH	0.0

MATERIALS CONSTANTS

YIELD STRENGTH REINFORCING 60000. ULTIMATE STRENGTH CONCRETE 3250.
% CONCRETE IN SHEAR 100.%

APPLIED ACTIONS

	DEAD LOAD	TRUCK #1 POSITIVE	TRUCK #1 NEGATIVE	TRUCK #2 POSITIVE	TRUCK #2 NEGATIVE	TRUCK POSITIVE	TRUCK NEGATIV
MOMENT Z-Z	-0.00	0.00	-0.00	0.0	0.0	0.0	0.0
SHEAR Y-Z	301.75	231.34		0.0		0.0	

DESIGN STEEL

AREA STEEL IN BOTTOM = 0.0 AREA STEEL IN TOP = 0.0
DISTANCE TO CENTROID = 0.0 DISTANCE TO CENTROID = 0.00

STIRRUP DESIGN

BARS	SPACING REQ'D
#3 AS = .22	0.0
#4 AS = .40	0.0
#5 AS = .62	0.0
#6 AS = .88	0.0

ALLOWABLE STRESSES

TENSION STEEL = 24000.0 COMPRESSION CONCRETE = 1300.0 STIRRUP STEEL = 16000.0
COMPRESSION STEEL = 24000.0 SHEAR IN CONCRETE = 90.0

ACTUAL STRESSES

TRUCK #1

NEGATIVE MOMENT

TENSION STEEL = 0.0 COMPRESSION CONCRETE = 0.0 STIRRUP STEEL = 0.0
COMPRESSION STEEL = 0.0 SHEAR IN CONCRETE = 34.6

SAMPLE PROBLEM FOR REINFORCED CONCRETE BOX GIRDER 585770 DXC4DES

REINFORCING CONCRETE SECTION DESIGN

SPAN 1 @ 4 TENTH POINT

INPUT SECTION DIMENSIONS

DEPTH SECTION	72.00	TOP FLANGE THICKNESS	7.50	BOTTOM FLANGE THICKNESS	5.00
THICKNESS WEB	24.00	TOP FLANGE WIDTH	536.00	BOTTOM FLANGE WIDTH	305.00

MATERIALS CONSTANTS

YIELD STRENGTH REINFORCING 60000. ULTIMATE STRENGTH CONCRETE 3250.
% CONCRETE IN SHEAR 100.%

APPLIED ACTIONS

	DEAD LOAD	TRUCK #1 POSITIVE	TRUCK #1 NEGATIVE	TRUCK #2 POSITIVE	TRUCK #2 NEGATIVE	TRUCK POSITIVE	TRUCK NEGATIV
MOMENT Z-Z	4658.53	4190.11	-1080.91	0.0	0.0	0.0	0.0
SHEAR Y-Z	-60.91	-105.28		0.0		0.0	

DESIGN STEEL

AREA STEEL IN BOTTOM = 68.17 AREA STEEL IN TOP = 0.0
DISTANCE TO CENTROID = 0.0 DISTANCE TO CENTROID = 0.00

STIRRUP DESIGN

BARS	SPACING REQ'D
#3 AS = .22	10.03
#4 AS = .40	18.24
#5 AS = .62	28.27
#6 AS = .88	40.12

ALLOWABLE STRESSES

TENSION STEEL = 24000.0 COMPRESSION CONCRETE = 1300.0 STIRRUP STEEL = 16000.0
COMPRESSION STEEL = 24000.0 SHEAR IN CONCRETE = 90.0

ACTUAL STRESSES

TRUCK #1

POSITIVE MOMENT

TENSION STEEL = 23535.2 COMPRESSION CONCRETE = 551.8 STIRRUP STEEL = 16000.0
COMPRESSION STEEL = 0.0 SHEAR IN CONCRETE = 90.0

SAMPLE PROBLEM FOR REINFORCED CONCRETE BOX GIRDER 585770 DXC4DES

REINFORCING CONCRETE SECTION DESIGN

SPAN 1 @ 10 TENTH POINT

INPUT SECTION DIMENSIONS

DEPTH SECTION	62.50	TOP FLANGE THICKNESS	9.00	BOTTOM FLANGE THICKNESS	0.0
THICKNESS WEB	300.00	TOP FLANGE WIDTH	536.00	BOTTOM FLANGE WIDTH	0.0

MATERIALS CONSTANTS

YIELD STRENGTH REINFORCING 60000. ULTIMATE STRENGTH CONCRETE 3250.
% CONCRETE IN SHEAR 100.%

APPLIED ACTIONS

	DEAD LOAD	TRUCK #1 POSITIVE	TRUCK #1 NEGATIVE	TRUCK #2 POSITIVE	TRUCK #2 NEGATIVE	TRUCK #3 POSITIVE	TRUCK #3 NEGATIVE
MOMENT Z-Z	-14700.53	240.80	-5424.70	0.0	0.0	0.0	0.0
SHEAR Y-Z	-597.64	-253.06		0.0		0.0	

DESIGN STEEL

AREA STEEL IN BOTTOM = 193.18 AREA STEEL IN TOP = 25.21
DISTANCE TO CENTROID = 0.0 DISTANCE TO CENTROID = 0.00

STIRRUP DESIGN

BARS	SPACING REQ'D
#3 AS = .22	0.0
#4 AS = .40	0.0
#5 AS = .62	0.0
#6 AS = .88	0.0

ALLOWABLE STRESSES

TENSION STEEL = 24000.0 COMPRESSION CONCRETE = 1300.0 STIRRUP STEEL = 16000.0
COMPRESSION STEEL = 24000.0 SHEAR IN CONCRETE = 90.0

ACTUAL STRESSES

TRUCK #1

NEGATIVE MOMENT

TENSION STEEL = 23772.1 COMPRESSION CONCRETE = 1295.9 STIRRUP STEEL = 0.0
COMPRESSION STEEL = 22804.5 SHEAR IN CONCRETE = 53.9

SAMPLE PROBLEM FOR REINFORCED CONCRETE BOX GIRDER 585770 DXC4DES

REINFORCING CONCRETE SECTION DESIGN

SPAN 2 @ 0 TENTH POINT

INPUT SECTION DIMENSIONS

DEPTH SECTION	62.50	TOP FLANGE THICKNESS	9.00	BOTTOM FLANGE THICKNESS	0.0
THICKNESS WEB	300.00	TOP FLANGE WIDTH	536.00	BOTTOM FLANGE WIDTH	0.0

MATERIALS CONSTANTS

YIELD STRENGTH REINFORCING 60000. ULTIMATE STRENGTH CONCRETE 3250.
% CONCRETE IN SHEAR 100.%

APPLIED ACTIONS

	DEAD LOAD	TRUCK #1 POSITIVE	TRUCK #1 NEGATIVE	TRUCK #2 POSITIVE	TRUCK #2 NEGATIVE	TRUCK #3 POSITIVE	TRUCK #3 NEGATIVE
MOMENT Z-Z	-17315.76	437.56	-6333.72	0.0	0.0	0.0	0.0
SHEAR Y-Z	701.21	273.66		0.0		0.0	

DESIGN STEEL

AREA STEEL IN BOTTOM = 227.01 AREA STEEL IN TOP = 59.67
DISTANCE TO CENTROID = 0.0 DISTANCE TO CENTROID = 0.00

STIRRUP DESIGN

BARS	SPACING REQ'D
#3 AS = .22	0.0
#4 AS = .40	0.0
#5 AS = .62	0.0
#6 AS = .88	0.0

ALLOWABLE STRESSES

TENSION STEEL = 24000.0 COMPRESSION CONCRETE = 1300.0 STIRRUP STEEL = 16000.0
COMPRESSION STEEL = 24000.0 SHEAR IN CONCRETE = 90.0

ACTUAL STRESSES

TRUCK #1

NEGATIVE MOMENT

TENSION STEEL = 23539.6 COMPRESSION CONCRETE = 1292.3 STIRRUP STEEL = 0.0
COMPRESSION STEEL = 22756.7 SHEAR IN CONCRETE = 61.2

SAMPLE PROBLEM FOR REINFORCED CONCRETE BOX GIRDER 585770 DXC4DES

REINFORCING CONCRETE SECTION DESIGN

SPAN 2 @ 5 TENTH POINT

INPUT SECTION DIMENSIONS

DEPTH SECTION	72.00	TOP FLANGE THICKNESS	7.50	BOTTOM FLANGE THICKNESS	5.00
THICKNESS WEB	24.00	TOP FLANGE WIDTH	536.00	BOTTOM FLANGE WIDTH	305.00

MATERIALS CONSTANTS

YIELD STRENGTH REINFORCING 60000. ULTIMATE STRENGTH CONCRETE 3250.
% CONCRETE IN SHEAR 100.%

APPLIED ACTIONS

	DEAD LOAD	TRUCK #1 POSITIVE	TRUCK #1 NEGATIVE	TRUCK #2 POSITIVE	TRUCK #2 NEGATIVE	TRUCK POSITIVE	TRUCK NEGATIV
MOMENT Z-Z	9390.74	4633.59	-654.22	0.0	0.0	0.0	0.0
SHEAR Y-Z	0.06	-110.38		0.0		0.0	

DESIGN STEEL

AREA STEEL IN BOTTOM = 107.39 AREA STEEL IN TOP = 0.0
DISTANCE TO CENTROID = 0.0 DISTANCE TO CENTROID = 0.00

STIRRUP DESIGN

BARS	SPACING REQ'D
#3 AS = .22	0.0
#4 AS = .40	0.0
#5 AS = .62	0.0
#6 AS = .88	0.0

ALLOWABLE STRESSES

TENSION STEEL = 24000.0 COMPRESSION CONCRETE = 1300.0 STIRRUP STEEL = 16000.0
COMPRESSION STEEL = 24000.0 SHEAR IN CONCRETE = 90.0

ACTUAL STRESSES

TRUCK #1

POSITIVE MOMENT

TENSION STEEL = 23765.3 COMPRESSION CONCRETE = 792.6 STIRRUP STEEL = 0.0
COMPRESSION STEEL = 0.0 SHEAR IN CONCRETE = 69.7

SAMPLE PROBLEM FOR REINFORCED CONCRETE BOX GIRDER 585770 DXC4DES

REINFORCING CONCRETE SECTION DESIGN

SPAN 2 @ 10 TENTH POINT

INPUT SECTION DIMENSIONS

DEPTH SECTION	62.50	TOP FLANGE THICKNESS	9.00	BOTTOM FLANGE THICKNESS	0.0
THICKNESS WEB	300.00	TOP FLANGE WIDTH	536.00	BOTTOM FLANGE WIDTH	0.0

MATERIALS CONSTANTS

YIELD STRENGTH REINFORCING 60000. ULTIMATE STRENGTH CONCRETE 3250.
% CONCRETE IN SHEAR 100.%

APPLIED ACTIONS

	DEAD LOAD	TRUCK #1 POSITIVE	TRUCK #1 NEGATIVE	TRUCK #2 POSITIVE	TRUCK #2 NEGATIVE	TRUCK #3 POSITIVE	TRUCK #3 NEGATIVE
MOMENT Z-Z	-17339.06	659.31	-6531.03	0.0	0.0	0.0	0.0
SHEAR Y-Z	-703.18	-276.70		0.0		0.0	

DESIGN STEEL

AREA STEEL IN BOTTOM = 229.12 AREA STEEL IN TOP = 61.83
DISTANCE TO CENTROID = 0.0 DISTANCE TO CENTROID = 0.00

STIRRUP DESIGN

BARS	SPACING REQ'D
#3 AS = .22	0.0
#4 AS = .40	0.0
#5 AS = .62	0.0
#6 AS = .88	0.0

ALLOWABLE STRESSES

TENSION STEEL = 24000.0 COMPRESSION CONCRETE = 1300.0 STIRRUP STEEL = 16000.0
COMPRESSION STEEL = 24000.0 SHEAR IN CONCRETE = 90.0

ACTUAL STRESSES

TRUCK #1

NEGATIVE MOMENT

TENSION STEEL = 23527.3 COMPRESSION CONCRETE = 1292.2 STIRRUP STEEL = 0.0
COMPRESSION STEEL = 22754.5 SHEAR IN CONCRETE = 61.5

SAMPLE PROBLEM FOR REINFORCED CONCRETE BOX GIRDER 585770 DXC4DES

REINFORCING CONCRETE SECTION DESIGN

SPAN 3 @ 0 TENTH POINT

INPUT SECTION DIMENSIONS

DEPTH SECTION	62.50	TOP FLANGE THICKNESS	9.00	BOTTOM FLANGE THICKNESS	0.0
THICKNESS WEB	300.00	TOP FLANGE WIDTH	536.00	BOTTOM FLANGE WIDTH	0.0

MATERIALS CONSTANTS

YIELD STRENGTH REINFORCING 60000. ULTIMATE STRENGTH CONCRETE 3250.
% CONCRETE IN SHEAR 100.%

APPLIED ACTIONS

	DEAD LOAD	TRUCK #1 POSITIVE	TRUCK #1 NEGATIVE	TRUCK #2 POSITIVE	TRUCK #2 NEGATIVE	TRUCK #3 POSITIVE	TRUCK #3 NEGATIVE
MOMENT Z-Z	-12992.90	295.69	-4948.71	0.0	0.0	0.0	0.0
SHEAR Y-Z	552.76	252.36		0.0		0.0	

DESIGN STEEL

AREA STEEL IN BOTTOM = 172.22 AREA STEEL IN TOP = 3.86
DISTANCE TO CENTROID = 0.0 DISTANCE TO CENTROID = 0.00

STIRRUP DESIGN

BARS	SPACING REQ'D
#3 AS = .22	0.0
#4 AS = .40	0.0
#5 AS = .62	0.0
#6 AS = .88	0.0

ALLOWABLE STRESSES

TENSION STEEL = 24000.0 COMPRESSION CONCRETE = 1300.0 STIRRUP STEEL = 16000.0
COMPRESSION STEEL = 24000.0 SHEAR IN CONCRETE = 90.0

ACTUAL STRESSES

TRUCK #1

NEGATIVE MOMENT

TENSION STEEL = 23960.9 COMPRESSION CONCRETE = 1299.2 STIRRUP STEEL = 0.0
COMPRESSION STEEL = 22853.2 SHEAR IN CONCRETE = 51.4

SAMPLE PROBLEM FOR REINFORCED CONCRETE BOX GIRDER 585770 DXC4DES

REINFORCING CONCRETE SECTION DESIGN

SPAN 3 @ 6 TENTH POINT

INPUT SECTION DIMENSIONS

DEPTH SECTION	72.00	TOP FLANGE THICKNESS	7.50	BOTTOM FLANGE THICKNESS	5.00
THICKNESS WEB	24.00	TOP FLANGE WIDTH	536.00	BOTTOM FLANGE WIDTH	305.00

MATERIALS CONSTANTS

YIELD STRENGTH REINFORCING 60000. ULTIMATE STRENGTH CONCRETE 3250.
% CONCRETE IN SHEAR 100.%

APPLIED ACTIONS

	DEAD LOAD	TRUCK #1 POSITIVE	TRUCK #1 NEGATIVE	TRUCK #2 POSITIVE	TRUCK #2 NEGATIVE	TRUCK POSITIVE	TRUCK NEGATI
MOMENT Z-Z	3545.73	3686.10	-989.46	0.0	0.0	0.0	0.0
SHEAR Y-Z	64.30	104.49		0.0		0.0	

DESIGN STEEL

AREA STEEL IN BOTTOM = 55.92 AREA STEEL IN TOP = 0.0
DISTANCE TO CENTROID = 0.0 DISTANCE TO CENTROID = 0.00

STIRRUP DESIGN

BARS	SPACING REQ'D
#3 AS = .22	9.12
#4 AS = .40	16.58
#5 AS = .62	25.70
#6 AS = .88	36.48

ALLOWABLE STRESSES

TENSION STEEL = 24000.0 COMPRESSION CONCRETE = 1300.0 STIRRUP STEEL = 16000.0
COMPRESSION STEEL = 24000.0 SHEAR IN CONCRETE = 90.0

ACTUAL STRESSES

TRUCK #1

POSITIVE MOMENT

TENSION STEEL = 23409.0 COMPRESSION CONCRETE = 475.4 STIRRUP STEEL = 16000.0
COMPRESSION STEEL = 0.0 SHEAR IN CONCRETE = 90.0

REINFORCING CONCRETE SECTION DESIGN

SPAN 8 @ 0 TENTH POINT

INPUT SECTION DIMENSIONS

DEPTH SECTION	48.00	TOP FLANGE THICKNESS	0.0	BOTTOM FLANGE THICKNESS	0.0
THICKNESS WEB	268.26	TOP FLANGE WIDTH	0.0	BOTTOM FLANGE WIDTH	0.0

MATERIALS CONSTANTS

YIELD STRENGTH REINFORCING 60000. ULTIMATE STRENGTH CONCRETE 3250.
% CONCRETE IN SHEAR 100.%

APPLIED ACTIONS

	DEAD LOAD	TRUCK #1 POSITIVE	TRUCK #1 NEGATIVE	TRUCK #2 POSITIVE	TRUCK #2 NEGATIVE	TRUCK #3 POSITIVE	TRUCK #3 NEGATIVE
MOMENT Z-Z	2615.24	2540.28	-1815.82	0.0	0.0	0.0	0.0
SHEAR Y-Z	-73.47	-78.81		0.0		0.0	
AXIAL X-X	1523.47	0.0	0.0	0.0	0.0	0.0	0.0

DESIGN STEEL

AREA STEEL IN BOTTOM =	0.0	AREA STEEL IN TOP =	0.0
DISTANCE TO CENTROID =	0.0	DISTANCE TO CENTROID =	0.00
AREA STEEL TO RIGHT =	0.0	AREA STEEL TO LEFT =	0.0
DISTANCE TO CENTROID =	0.0	DISTANCE TO CENTROID =	0.0

ALLOWABLE STRESSES

TENSION STEEL =	24000.0	COMPRESSION CONCRETE =	1300.0	STIRRUP STEEL =	16000.0
COMPRESSION STEEL =	24000.0	SHEAR IN CONCRETE =	0.0		

ACTUAL STRESSES

TRUCK #1

POSITIVE MOMENT

TENSION STEEL =	13387.9	COMPRESSION CONCRETE =	785.2	STIRRUP STEEL =	0.0
COMPRESSION STEEL =	11309.7	SHEAR IN CONCRETE =	0.0		

SAMPLE PROBLEM FOR REINFORCED CONCRETE BOX GIRDER 585770 DXC4DES

REINFORCING CONCRETE SECTION DESIGN

SPAN 8 @ 7 TENTH POINT

INPUT SECTION DIMENSIONS

DEPTH SECTION	48.00	TOP FLANGE THICKNESS	0.0	BOTTOM FLANGE THICKNESS	0.0
THICKNESS WEB	56.52	TOP FLANGE WIDTH	0.0	BOTTOM FLANGE WIDTH	0.0

MATERIALS CONSTANTS

YIELD STRENGTH REINFORCING 60000. ULTIMATE STRENGTH CONCRETE 3250.
% CONCRETE IN SHEAR 100.%

APPLIED ACTIONS

	DEAD LOAD	TRUCK #1 POSITIVE	TRUCK #1 NEGATIVE	TRUCK #2 POSITIVE	TRUCK #2 NEGATIVE	TRUCK #3 POSITIVE	TRUCK #3 NEGATIVE
MOMENT Z-Z	403.71	392.14	-279.79	0.0	0.0	0.0	0.0
SHEAR Y-Z	-73.47	-78.81		0.0		0.0	
AXIAL X-X	1795.72	0.0	0.0	0.0	0.0	0.0	0.0

DESIGN STEEL

AREA STEEL IN BOTTOM =	0.0	AREA STEEL IN TOP =	0.0
DISTANCE TO CENTROID =	0.0	DISTANCE TO CENTROID =	0.00
AREA STEEL TO RIGHT =	0.0	AREA STEEL TO LEFT =	0.0
DISTANCE TO CENTROID =	0.0	DISTANCE TO CENTROID =	0.0

ALLOWABLE STRESSES

TENSION STEEL =	24000.0	COMPRESSION CONCRETE =	1300.0	STIRRUP STEEL =	16000.0
COMPRESSION STEEL =	24000.0	SHEAR IN CONCRETE =	0.0		

ACTUAL STRESSES

TRUCK #1

POSITIVE MOMENT

TENSION STEEL =	0.0	COMPRESSION CONCRETE =	911.1	STIRRUP STEEL =	0.0
COMPRESSION STEEL =	16604.4	SHEAR IN CONCRETE =	0.0		

SAMPLE PROBLEM FOR REINFORCED CONCRETE BOX GIRDER 585770 DXC4DES

REINFORCING CONCRETE SECTION DESIGN

SPAN 0 @ 0 TENTH POINT

INPUT SECTION DIMENSIONS

DEPTH SECTION	48.00	TOP FLANGE THICKNESS	0.0	BOTTOM FLANGE THICKNESS	0.0
THICKNESS WEB	268.26	TOP FLANGE WIDTH	0.0	BOTTOM FLANGE WIDTH	0.0

MATERIALS CONSTANTS

YIELD STRENGTH REINFORCING 60000. ULTIMATE STRENGTH CONCRETE 3250.
% CONCRETE IN SHEAR 100.%

APPLIED ACTIONS

	DEAD LOAD	TRUCK #1 POSITIVE	TRUCK #1 NEGATIVE	TRUCK #2 POSITIVE	TRUCK #2 NEGATIVE	TRUCK #3 POSITIVE	TRUCK #3 NEGATIVE
MOMENT Z-Z	-4346.16	2171.33	-3475.95	0.0	0.0	0.0	0.0
SHEAR Y-Z	200.74	177.16		0.0		0.0	
AXIAL X-X	1472.02	0.0	0.0	0.0	0.0	0.0	0.0

DESIGN STEEL

AREA STEEL IN BOTTOM =	0.0	AREA STEEL IN TOP =	0.0
DISTANCE TO CENTROID =	0.0	DISTANCE TO CENTROID =	0.00
AREA STEEL TO RIGHT =	0.0	AREA STEEL TO LEFT =	0.0
DISTANCE TO CENTROID =	0.0	DISTANCE TO CENTROID =	0.0

ALLOWABLE STRESSES

TENSION STEEL =	24000.0	COMPRESSION CONCRETE =	1300.0	STIRRUP STEEL =	16000.0
COMPRESSION STEEL =	24000.0	SHEAR IN CONCRETE =	0.0		

ACTUAL STRESSES

TRUCK #1

NEGATIVE MOMENT

TENSION STEEL =	25480.6	COMPRESSION CONCRETE =	1151.5	STIRRUP STEEL =	0.0
COMPRESSION STEEL =	16304.1	SHEAR IN CONCRETE =	0.0		

SAMPLE PROBLEM FOR REINFORCED CONCRETE BOX GIRDER 585770 DXC4DES

REINFORCING CONCRETE SECTION DESIGN

SPAN 10 @ 0 TENTH POINT

INPUT SECTION DIMENSIONS

DEPTH SECTION	0.75	TOP FLANGE THICKNESS	0.25	BOTTOM FLANGE THICKNESS	0.25
THICKNESS WEB	0.25	TOP FLANGE WIDTH	0.25	BOTTOM FLANGE WIDTH	0.25

MATERIALS CONSTANTS

YIELD STRENGTH REINFORCING 60000. ULTIMATE STRENGTH CONCRETE 3250.
% CONCRETE IN SHEAR 100.%

APPLIED ACTIONS

	DEAD LOAD	TRUCK #1 POSITIVE	TRUCK #1 NEGATIVE	TRUCK #2 POSITIVE	TRUCK #2 NEGATIVE	TRUCK #3 POSITIVE	TRUCK #3 NEGATIVE
MOMENT Z-Z	0.0	0.25	0.25	0.0	0.0	0.0	0.0
SHEAR Y-Z	0.0	0.25		0.0		0.0	

DESIGN STEEL

AREA STEEL IN BOTTOM =	0.0	AREA STEEL IN TOP =	0.0
DISTANCE TO CENTROID =	0.0	DISTANCE TO CENTROID =	0.00
AREA STEEL TO RIGHT =	0.0	AREA STEEL TO LEFT =	0.0
DISTANCE TO CENTROID =	0.0	DISTANCE TO CENTROID =	0.0

ALLOWABLE STRESSES

TENSION STEEL =	12047.1	COMPRESSION CONCRETE =	0.0	STIRRUP STEEL =	9035.3
COMPRESSION STEEL =	0.0	SHEAR IN CONCRETE =	0.0		

ACTUAL STRESSES

TRUCK #1

POSITIVE MOMENT

TENSION STEEL =	0.0	COMPRESSION CONCRETE =	0.0	STIRRUP STEEL =	3011.8
COMPRESSION STEEL =	0.0	SHEAR IN CONCRETE =	0.0		

NOW CALLING 1BRSYS00

4.7 COMPOSITE STEEL GIRDER BRIDGE

The sample problem for a continuous composite steel girder bridge is a design analysis of 2 span haunched structure with unsymmetrical spans. It is composite in the positive moment regions and has high strength steel girders throughout. The girders have parabolic haunches over the support and are made up of two sections. The first section runs from the 1.0 to the 1.7 and from the 2.3 to the 3.0. The second section has a larger top flange as it is in the non-composite negative moment region between the 1.7 and 2.3.

The program is loaded and ran in one operation although it is basically coded as two separate runs. In the second step, the program shows the combined stresses as well as the live load stresses. Dead load stresses are output in the first step. The program does not design transverse nor longitudinal stiffeners for composite bridges and to show this all values related are set to zero.

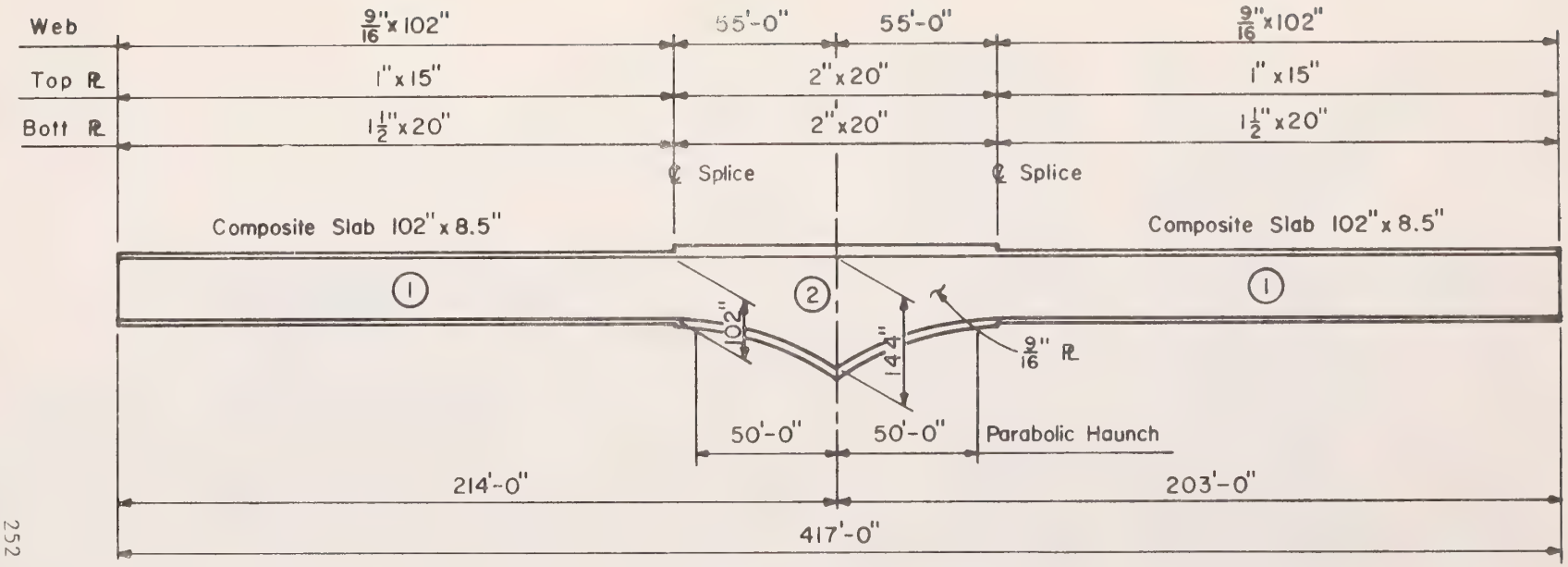

GIRDER ELEVATION

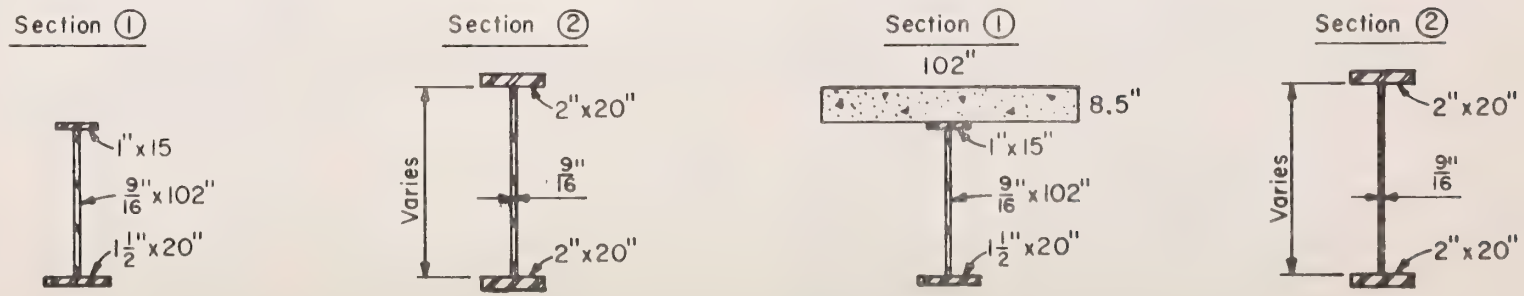

NON-COMPOSITE SECTIONS

COMPOSITE SECTIONS

FORM C-16
Rev. 3/11/69

WYOMING STATE HIGHWAY DEPARTMENT
CHEYENNE WYOMING
BRIDGE DIVISION

DESIGN SYSTEM

SHEET NO 1 OF 5
BY DAG DATE 9-27-73
CHECKED

//EXEC BRSYSØØ

Employee No. 68	Dept. Code	P or D	Job Code 75	Work Code	Str. No.
7415	7Ø	P	CWW3	DES	

I COMMENT CARD

1ØØ	SAMPLE PROBLEM FOR A 2 SPAN COMPOSITE STEEL GIRDER BRIDGE DL

1 WORK	2 CODE	3 DATA	5 CODE	ENTRY 1 (6–15)	ENTRY 2 (25)	ENTRY 3 (35)	ENTRY 4 (45)	ENTRY 5 (55)	ENTRY 6 (65)	66 CONT
DC		ØØ1		Ø1111.	2.	2.				
		1ØØ		1Ø4.	11Ø.	2ØØ.	2Ø5.			
		1Ø1		1.	214.		164.	3.	1Ø2.	
		1Ø2		144.	1Ø2.					
		1Ø3		159.	1.	159.	2.	214.	2.	
		1Ø1		2.	2Ø3.	5Ø.	2Ø3.	3.	144.	
		1Ø2		1Ø2.	1Ø2.					
		1Ø3		55.	2.	55.	1.	2Ø3.	1.	
		111		1.	.5625	2Ø.	15.	1.	1.5	
		111		2.	.5625	2Ø.	2Ø.	2.	2.	
DC		ØØ2		11111.						
		2Ø1		1.Ø1	.49	29ØØØ.				
DC		ØØ5		1Ø.	Ø.	1.				
		5Ø1					.55			
		5Ø2					.75			

TRAILER CARD

999	

1 3

NOTE: A trailer card must follow the last structure card containing data

FORM C-16
Rev. 3/11/69

WYOMING STATE HIGHWAY DEPARTMENT
CHEYENNE WYOMING
BRIDGE DIVISION

SHEET NO 2 OF 5
BY DAG DATE 9-27-73
CHECKED

//EXEC BRSYSØØ

DESIGN SYSTEM

Employee No. 68	Dept. Code	P or Job D / Code 75	Work Code	Str. No.

65 80 64

1 COMMENT CARD

1 2	
ØØØ	

1 2 WORK CODE	3 5 DATA CODE	ENTRY 1 (6–15)	ENTRY 2 (25)	ENTRY 3 (35)	ENTRY 4 (45)	ENTRY 5 (55)	ENTRY 6 (65)	66 CONT
	51Ø	1.	1.	2.	1.			
	53Ø	1Ø4.	2.	5ØØØØ.				1
	531		1Ø2.			1.		
	53Ø	11Ø.	2.	5ØØØØ.				1
	531		1Ø2.			1.	16.	
	53Ø	2ØØ.	2.	5ØØØØ.				1
	531		1Ø2.			1.	16.	
	53Ø	2Ø5.	2.	5ØØØØ.				1
	531		1Ø2.			1.		

TRAILER CARD

1 3	
999	

NOTE: A trailer card must follow the last structure card containing data

WYOMING HIGHWAY DEPARTMENT
BRIDGE DESIGN DIVISION

DATE
PAGE NO. 1

SAMPLE PROBLEM FOR A 2 SPAN COMPOSITE STEEL GIRDER BRIDGE DL 741570PCWW3DES
INPUT AS RECEIVED BY COMPUTER

WORK CODE	DATA CODE	ENTRY 1	ENTRY 2	ENTRY 3	ENTRY 4	ENTRY 5	ENTRY 6
DC	1	1111.00000	2.00000	2.00000	0.0	0.0	0.0
	100	104.00000	110.00000	200.00000	205.00000	0.0	0.0
	101	1.00000	214.00000	0.0	164.00000	3.00000	102.00000
	102	144.00000	102.00000	0.0	0.0	0.0	0.0
	103	159.00000	1.00000	159.00000	2.00000	214.00000	2.00000
	101	2.00000	203.00000	50.00000	203.00000	3.00000	144.00000
	102	102.00000	102.00000	0.0	0.0	0.0	0.0
	103	55.00000	2.00000	55.00000	1.00000	203.00000	1.00000
	111	1.00000	0.56250	20.00000	15.00000	1.00000	1.50000
	111	2.00000	0.56250	20.00000	20.00000	2.00000	2.00000

WYOMING HIGHWAY DEPARTMENT
BRIDGE DESIGN DIVISION

DATE
PAGE NO. 2

SAMPLE PROBLEM FOR A 2 SPAN COMPOSITE STEEL GIRDER BRIDGE DL 741570PCWW3DES

BEAM PROPERTIES — PARABOLIC DEPTH VARIATION.

SPAN NO. 1 SPAN LENGTH = 214.000 SPAN RATIO = 1.000

POINT	BEAM DEPTH	XSECT AREA	MOMENTS OF INERTIA	DIST TO CENT(X)	WIDTH OF WEB	FLANGE THICKNESS TOP	FLANGE THICKNESS BOT	FLANGE WIDTH TOP	FLANGE WIDTH BOT
1.00	102.00	102.4	163934.	44.9	0.563	1.000	1.500	15.00	20.00
1.05	102.00	102.4	163934.	44.9	0.563	1.000	1.500	15.00	20.00
1.10	102.00	102.4	163934.	44.9	0.563	1.000	1.500	15.00	20.00
1.15	102.00	102.4	163934.	44.9	0.563	1.000	1.500	15.00	20.00
1.20	102.00	102.4	163934.	44.9	0.563	1.000	1.500	15.00	20.00
1.25	102.00	102.4	163934.	44.9	0.563	1.000	1.500	15.00	20.00
1.30	102.00	102.4	163934.	44.9	0.563	1.000	1.500	15.00	20.00
1.35	102.00	102.4	163934.	44.9	0.563	1.000	1.500	15.00	20.00
1.40	102.00	102.4	163934.	44.9	0.563	1.000	1.500	15.00	20.00
1.45	102.00	102.4	163934.	44.9	0.563	1.000	1.500	15.00	20.00
1.50	102.00	102.4	163934.	44.9	0.563	1.000	1.500	15.00	20.00
1.55	102.00	102.4	163934.	44.9	0.563	1.000	1.500	15.00	20.00
1.60	102.00	102.4	163934.	44.9	0.563	1.000	1.500	15.00	20.00
1.65	102.00	102.4	163934.	44.9	0.563	1.000	1.500	15.00	20.00
1.70	102.00	102.4	163934.	44.9	0.563	1.000	1.500	15.00	20.00
1.75	102.00	137.4	266091.	53.0	0.563	2.000	2.000	20.00	20.00
1.80	102.87	137.9	271014.	53.4	0.563	2.000	2.000	20.00	20.00
1.85	107.38	140.4	297361.	55.7	0.563	2.000	2.000	20.00	20.00
1.90	115.74	145.1	348968.	59.9	0.563	2.000	2.000	20.00	20.00
1.95	127.95	152.0	435936.	66.0	0.563	2.000	2.000	20.00	20.00
2.00	144.00	161.0	566314.	74.0	0.563	2.000	2.000	20.00	20.00

	FIXED END MOMENTS FAC	FCA
1.10	-0.0792	0.0133
1.20	-0.1219	0.0470
1.30	-0.1351	0.0916
1.40	-0.1265	0.1377
1.50	-0.1034	0.1758
1.60	-0.0732	0.1965
1.70	-0.0433	0.1904
1.80	-0.0196	0.1535
1.90	-0.0047	0.0893

STIFFNESS KAC= 4.4027 KCA= 6.4569

CARRY OVERS CAC= 0.6766 CCA= 0.4613

SAMPLE PROBLEM FOR A 2 SPAN COMPOSITE STEEL GIRDER BRIDGE DL 741570PCWW3DES

BEAM PROPERTIES — PARABOLIC DEPTH VARIATION.

SPAN NO. 2 SPAN LENGTH = 203.000 SPAN RATIO = 0.949

POINT	BEAM DEPTH	XSECT AREA	MOMENTS OF INERTIA	DIST TO CENT(X)	WIDTH OF WEB	FLANGE THICKNESS TOP	FLANGE THICKNESS BOT	FLANGE WIDTH TOP	FLANGE WIDTH BOT
2.00	144.00	161.0	566315.	74.0	0.563	2.000	2.000	20.00	20.00
2.05	128.68	152.4	441441.	66.3	0.563	2.000	2.000	20.00	20.00
2.10	116.82	145.7	357114.	60.4	0.563	2.000	2.000	20.00	20.00
2.15	108.42	141.0	303625.	56.2	0.563	2.000	2.000	20.00	20.00
2.20	103.48	138.2	274514.	53.7	0.563	2.000	2.000	20.00	20.00
2.25	102.00	137.4	266091.	53.0	0.563	2.000	2.000	20.00	20.00
2.30	102.00	102.4	163934.	44.9	0.563	1.000	1.500	15.00	20.00
2.35	102.00	102.4	163934.	44.9	0.563	1.000	1.500	15.00	20.00
2.40	102.00	102.4	163934.	44.9	0.563	1.000	1.500	15.00	20.00
2.45	102.00	102.4	163934.	44.9	0.563	1.000	1.500	15.00	20.00
2.50	102.00	102.4	163934.	44.9	0.563	1.000	1.500	15.00	20.00
2.55	102.00	102.4	163934.	44.9	0.563	1.000	1.500	15.00	20.00
2.60	102.00	102.4	163934.	44.9	0.563	1.000	1.500	15.00	20.00
2.65	102.00	102.4	163934.	44.9	0.563	1.000	1.500	15.00	20.00
2.70	102.00	102.4	163934.	44.9	0.563	1.000	1.500	15.00	20.00
2.75	102.00	102.4	163934.	44.9	0.563	1.000	1.500	15.00	20.00
2.80	102.00	102.4	163934.	44.9	0.563	1.000	1.500	15.00	20.00
2.85	102.00	102.4	163934.	44.9	0.563	1.000	1.500	15.00	20.00
2.90	102.00	102.4	163934.	44.9	0.563	1.000	1.500	15.00	20.00
2.95	102.00	102.4	163934.	44.9	0.563	1.000	1.500	15.00	20.00
3.00	102.00	102.4	163934.	44.9	0.563	1.000	1.500	15.00	20.00

	FIXED END MOMENTS FCE	FEC
2.10	-0.0847	0.0045
2.20	-0.1459	0.0185
2.30	-0.1813	0.0408
2.40	-0.1872	0.0692
2.50	-0.1675	0.0978
2.60	-0.1313	0.1198
2.70	-0.0873	0.1280
2.80	-0.0448	0.1154
2.90	-0.0127	0.0751

STIFFNESS: KCF= 6.8531 KFC= 4.6483

CARRY OVERS: CCF= 0.4608 CFC= 0.6794

SAMPLE PROBLEM FOR A 2 SPAN COMPOSITE STEEL GIRDER BRIDGE DL 741570PCWW3DES

STIFFNESS AND CARRYOVER FACTORS AS USED IN MATRIX INVERSION

SPAN NO.	STIFFNESS	CARRYOVERS	STIFFNESS
1	KAC=0.440271E 01	CAC=0.676590E 00	KCA=0.645687E 01
2	KCE=0.685310E 01	CCE=0.460831E 00	KEC=0.464826E 01
3	KEG=0.100000E-09	CEG=0.100000E 01	KGE=0.100000E-09
4	KGI=0.100000E-09	CGI=0.100000E 01	KIG=0.100000E-09
5	KIK=0.100000E-09	CIK=0.100000E 01	KKI=0.100000E-09
6	KKM=0.100000E-09	CKM=0.100000E 01	KMK=0.100000E-09
7	KAB=0.100000E-09	CAB=0.100000E 01	KBA=0.100000E-09
8	KCD=0.100000E-09	CCD=0.100000E 01	KDC=0.100000E-09
9	KEF=0.100000E-09	CEF=0.100000E 01	KFE=0.100000E-09
10	KGH=0.100000E-09	CGH=0.100000E 01	KHG=0.100000E-09
11	KIJ=0.100000E-09	CIJ=0.100000E 01	KJI=0.100000E-09
12	KKL=0.100000E-09	CKL=0.100000E 01	KLK=0.100000E-09
13	KMN=0.100000E-09	CMN=0.100000E 01	KNM=0.100000E-09
14	KBD=0.100000E-09	CBD=0.100000E 01	KDB=0.100000E-09
15	KDF=0.100000E-09	CDF=0.100000E 01	KFD=0.100000E-09
16	KFH=0.100000E-09	CFH=0.100000E 01	KHF=0.100000E-09
17	KHJ=0.100000E-09	CHJ=0.100000E 01	KJH=0.100000E-09
18	KJL=0.100000E-09	CJL=0.100000E 01	KLJ=0.100000E-09
19	KLN=0.100000E-09	CLN=0.100000E 01	KNL=0.100000E-09

SAMPLE PROBLEM FOR A 2 SPAN COMPOSITE STEEL GIRDER BRIDGE DL 741570PCWW3DES

2 4 1CT

CELL 8 ANALYSIS

```
MCA=+ 0.5145ECA+ 0.3298ECC+-0.3298EGE+ 0.3298EIG+-0.3298EKI+-0.3481ECA+-0.4855ECE+ 0.3298EEG+-0.3298EGI
    + 0.3298EIK+-0.3298EKM+ 0.3298EMK+ 0.0        0.0        0.0        0.0        0.0        0.0
MEC=+ 0.0000ECA+ 0.0   ECC+ 1.0000EGE+-1.0000EIG+ 1.0000EKI+-0.0000ECA+ 0.0000ECE+-1.0000EEG+ 1.0000EGI
    +-1.0000EIK+ 1.0000EKM+-1.0000EMK+ 0.0        0.0        0.0        0.0        0.0        0.0
MGE=+ 0.0000ECA+-0.0000ECC+ 0.0000EGE+ 1.0000EIG+-1.0000EKI+-0.0000ECA+ 0.0000ECE+-0.0000EEG+-1.0000EGI
    + 1.0000EIK+-1.0000EKM+ 1.0000EMK+ 0.0        0.0        0.0        0.0        0.0        0.0
MIG=+-0.0000ECA+ 0.0000ECC+ 0.0   EGE+ 0.0000EIG+ 1.0000EKI+ 0.0000ECA+-0.0000ECE+ 0.0000EEG+ 0.0   EGI
    +-1.0000EIK+ 1.0000EKM+-1.0000EMK+ 0.0        0.0        0.0        0.0        0.0        0.0
MKI=+ 0.0   ECA+-0.0000ECC+ 0.0000EGE+ 0.0   EIG+ 0.0000EKI+-0.0000ECA+ 0.0   ECE+-0.0000EEG+ 0.0000EGI
    + 0.0   EIK+-1.0000EKM+ 1.0000EMK+ 0.0        0.0        0.0        0.0        0.0        0.0
```

SAMPLE PROBLEM FOR A 2 SPAN COMPOSITE STEEL GIRDER BRIDGE DL 741570PCWW3DES

2 4 1CT

CELL 8 ANALYSIS

WYOMING HIGHWAY DEPARTMENT
BRIDGE DESIGN DIVISION

DATE
PAGE NO. 7

SAMPLE PROBLEM FOR A 2 SPAN COMPOSITE STEEL GIRDER BRIDGE DL 741570PCWW3DES

INFLUENCE LINES

LOAD POINTS	V 1.0R	M 1.0R	M 1.1	M 1.2	M 1.3	M 1.4	M 1.5
1.1	0.865568	0.0	0.0	0.0	0.0	0.046227	0.0
1.2	0.733421	0.0	0.0	0.0	0.0	0.093369	0.0
1.3	0.605845	0.0	0.0	0.0	0.0	0.142338	0.0
1.4	0.485125	0.0	0.0	0.0	0.0	0.194050	0.0
1.5	0.373545	0.0	0.0	0.0	0.0	0.149418	0.0
1.6	0.273393	0.0	0.0	0.0	0.0	0.109357	0.0
1.7	0.186951	0.0	0.0	0.0	0.0	0.074781	0.0
1.8	0.114183	0.0	0.0	0.0	0.0	0.045673	0.0
1.9	0.052400	0.0	0.0	0.0	0.0	0.020960	0.0
2.1	-0.042613	0.0	0.0	0.0	0.0	-0.017045	0.0
2.2	-0.076923	0.0	0.0	0.0	0.0	-0.030769	0.0
2.3	-0.101458	0.0	0.0	0.0	0.0	-0.040583	0.0
2.4	-0.113697	0.0	0.0	0.0	0.0	-0.045479	0.0
2.5	-0.113598	0.0	0.0	0.0	0.0	-0.045439	0.0
2.6	-0.103215	0.0	0.0	0.0	0.0	-0.041286	0.0
2.7	-0.084610	0.0	0.0	0.0	0.0	-0.033844	0.0
2.8	-0.059834	0.0	0.0	0.0	0.0	-0.023934	0.0
2.9	-0.030945	0.0	0.0	0.0	0.0	-0.012378	0.0
AREA 1=	0.419043	0.0	0.0	0.0	0.0	0.087617	0.0
AREA 2=	-0.068953	0.0	0.0	0.0	0.0	-0.027581	0.0
SUM - =	-0.068953	0.0	0.0	0.0	0.0	-0.027581	0.0
SUM + =	0.419043	0.0	0.0	0.0	0.0	0.087617	0.0
SUM TOT	0.350090	0.0	0.0	0.0	0.0	0.060036	0.0

WYOMING HIGHWAY DEPARTMENT
BRIDGE DESIGN DIVISION

DATE
PAGE NO. 8

SAMPLE PROBLEM FOR A 2 SPAN COMPOSITE STEEL GIRDER BRIDGE DL 741570PCWW3DES

INFLUENCE LINES

LOAD POINTS	M 1.6	M 1.7	M 1.8	M 1.9	M 2.0L	V 2.0L	R 2.0
1.1	0.0	0.0	0.0	0.0	-0.034432	-0.134432	0.170730
1.2	0.0	0.0	0.0	0.0	-0.066579	-0.266579	0.336765
1.3	0.0	0.0	0.0	0.0	-0.094155	-0.394155	0.493412
1.4	0.0	0.0	0.0	0.0	-0.114875	-0.514875	0.635975
1.5	0.0	0.0	0.0	0.0	-0.126455	-0.626454	0.759761
1.6	0.0	0.0	0.0	0.0	-0.126608	-0.726607	0.860076
1.7	0.0	0.0	0.0	0.0	-0.113049	-0.813049	0.932223
1.8	0.0	0.0	0.0	0.0	-0.085817	-0.885817	0.976284
1.9	0.0	0.0	0.0	0.0	-0.047600	-0.947600	0.997780
2.1	0.0	0.0	0.0	0.0	-0.042613	-0.042613	0.987534
2.2	0.0	0.0	0.0	0.0	-0.076923	-0.076923	0.958015
2.3	0.0	0.0	0.0	0.0	-0.101458	-0.101458	0.908414
2.4	0.0	0.0	0.0	0.0	-0.113697	-0.113697	0.833555
2.5	0.0	0.0	0.0	0.0	-0.113598	-0.113598	0.733351
2.6	0.0	0.0	0.0	0.0	-0.103216	-0.103216	0.612026
2.7	0.0	0.0	0.0	0.0	-0.084610	-0.084610	0.473805
2.8	0.0	0.0	0.0	0.0	-0.059834	-0.059834	0.322910
2.9	0.0	0.0	0.0	0.0	-0.030945	-0.030945	0.163567
AREA 1=	0.0	0.0	0.0	0.0	-0.080957	-0.580957	0.666300
AREA 2=	0.0	0.0	0.0	0.0	-0.068953	-0.068953	0.615941
SUM - =	0.0	0.0	0.0	0.0	-0.149910	-0.649910	0.0
SUM + =	0.0	0.0	0.0	0.0	0.0	0.0	1.282241
SUM TOT	0.0	0.0	0.0	0.0	-0.149910	-0.649910	1.282241

WYOMING HIGHWAY DEPARTMENT
BRIDGE DESIGN DIVISION
SAMPLE PROBLEM FOR A 2 SPAN COMPOSITE STEEL GIRDER BRIDGE DL 741570PCWW3DES

DATE
PAGE NO. 9

INFLUENCE LINES

LOAD POINTS	V 2.0R	M 2.0R	M 2.1	M 2.2	M 2.3	M 2.4	M 2.5
1.1	0.036298	-0.034432	0.0	0.0	0.0	0.0	-0.017216
1.2	0.070186	-0.066579	0.0	0.0	0.0	0.0	-0.033289
1.3	0.099257	-0.094155	0.0	0.0	0.0	0.0	-0.047078
1.4	0.121100	-0.114875	0.0	0.0	0.0	0.0	-0.057438
1.5	0.133307	-0.126455	0.0	0.0	0.0	0.0	-0.063227
1.6	0.133468	-0.126608	0.0	0.0	0.0	0.0	-0.063304
1.7	0.119175	-0.113049	0.0	0.0	0.0	0.0	-0.056524
1.8	0.090467	-0.085817	0.0	0.0	0.0	0.0	-0.042908
1.9	0.050180	-0.047600	0.0	0.0	0.0	0.0	-0.023800
2.1	0.044922	-0.042613	0.0	0.0	0.0	0.0	0.026124
2.2	0.081092	-0.076923	0.0	0.0	0.0	0.0	0.056398
2.3	0.806956	-0.101458	0.0	0.0	0.0	0.0	0.091561
2.4	0.719858	-0.113697	0.0	0.0	0.0	0.0	0.132871
2.5	0.619753	-0.113598	0.0	0.0	0.0	0.0	0.180351
2.6	0.508810	-0.103216	0.0	0.0	0.0	0.0	0.138111
2.7	0.389195	-0.084610	0.0	0.0	0.0	0.0	0.099985
2.8	0.263076	-0.059834	0.0	0.0	0.0	0.0	0.064943
2.9	0.132622	-0.030945	0.0	0.0	0.0	0.0	0.031957
AREA 1=	0.085344	-0.080957	0.0	0.0	0.0	0.0	-0.040478
AREA 2=	0.546988	-0.068953	0.0	0.0	0.0	0.0	0.078003
SUM - =	0.0	-0.149910	0.0	0.0	0.0	0.0	-0.040478
SUM + =	0.632332	0.0	0.0	0.0	0.0	0.0	0.078003
SUM TOT	0.632332	-0.149910	0.0	0.0	0.0	0.0	0.037525

WYOMING HIGHWAY DEPARTMENT
BRIDGE DESIGN DIVISION

DATE
PAGE NO. 10

SAMPLE PROBLEM FOR A 2 SPAN COMPOSITE STEEL GIRDER BRIDGE DL 741570PCWW3DES

INFLUENCE LINES

LOAD POINTS	M 2.6	M 2.7	M 2.8	M 2.9	M 3.0L	V 3.0L	R 3.0
1.1	0.0	0.0	0.0	0.0	-0.000000	0.036298	-0.036298
1.2	0.0	0.0	0.0	0.0	-0.000000	0.070186	-0.070186
1.3	0.0	0.0	0.0	0.0	-0.000000	0.099257	-0.099257
1.4	0.0	0.0	0.0	0.0	-0.000000	0.121100	-0.121100
1.5	0.0	0.0	0.0	0.0	-0.000000	0.133307	-0.133307
1.6	0.0	0.0	0.0	0.0	-0.000000	0.133468	-0.133468
1.7	0.0	0.0	0.0	0.0	-0.000000	0.119175	-0.119175
1.8	0.0	0.0	0.0	0.0	-0.000000	0.090467	-0.090467
1.9	0.0	0.0	0.0	0.0	-0.000000	0.050180	-0.050180
2.1	0.0	0.0	0.0	0.0	0.000000	-0.055078	0.055078
2.2	0.0	0.0	0.0	0.0	0.000000	-0.118908	0.118908
2.3	0.0	0.0	0.0	0.0	0.000000	-0.193044	0.193044
2.4	0.0	0.0	0.0	0.0	0.000000	-0.280142	0.280142
2.5	0.0	0.0	0.0	0.0	0.000000	-0.380247	0.380247
2.6	0.0	0.0	0.0	0.0	0.000000	-0.491190	0.491190
2.7	0.0	0.0	0.0	0.0	0.000000	-0.610805	0.610805
2.8	0.0	0.0	0.0	0.0	0.000000	-0.736924	0.736924
2.9	0.0	0.0	0.0	0.0	0.000000	-0.867378	0.867378
AREA 1=	0.0	0.0	0.0	0.0	-0.000000	0.085344	-0.085344
AREA 2=	0.0	0.0	0.0	0.0	0.000000	-0.401609	0.401609
SUM - =	0.0	0.0	0.0	0.0	-0.000000	-0.401609	0.401609
SUM + =	0.0	0.0	0.0	0.0	0.000000	0.085344	-0.085344
SUM TOT	0.0	0.0	0.0	0.0	-0.000000	-0.316266	0.316266

NOW CALLING 1BRSYS00

WYOMING HIGHWAY DEPARTMENT
BRIDGE DESIGN DIVISION

DATE
PAGE NO. 10

SAMPLE PROBLEM FOR A 2 SPAN COMPOSITE STEEL GIRDER BRIDGE DL 741570PCWW3DES
INPUT AS RECEIVED BY COMPUTER

WORK CODE	DATA CODE	ENTRY 1	ENTRY 2	ENTRY 3	ENTRY 4	ENTRY 5	ENTRY 6
DC	2	11111.00000	0.0	0.0	0.0	0.0	0.0
	201	1.01000	0.49000	29000.00000	0.0	0.0	0.0
DC	5	10.00000	0.0	1.00000	0.0	0.0	0.0

NOW CALLING 1BRSYS21

NOW CALLING 1BRSYS31

NOW CALLING 1BRSYS22

SAMPLE PROBLEM FOR A 2 SPAN COMPOSITE STEEL GIRDER BRIDGE DL 741570PCWW3DES

** GIRDER MOMENTS, SHEARS, AND REACTIONS **

SPAN LENGTH OF NO. 1=214.00 FT
GIRDER WEIGHT= 0.35 KIPS/FT SUPERIMPOSED DEAD LOAD= 1.01 KIPS/FT E(MODULUS)= 29000 KIPS/SQ I
LIVE LOAD WHEEL FRACTION= 0.0

	DEAD LOAD GIRDER			SUPERIMPOSED DEAD LOAD				POINT LOADING		
POINT	REACTION	SHEAR	MOMENT	REACTION	SHEAR	MOMENT	LOADING	REACTION	SHEAR	MOMENT
1.0R	26.239	26.239	0.0	75.668	75.668	0.0		0.0	0.0	0.0
1.1		18.784	0.0		54.054	0.0			0.0	0.0
1.2		11.329	0.0		32.440	0.0			0.0	0.0
1.3		3.874	0.0		10.826	0.0			0.0	0.0
1.4		-3.581	969.78		-10.788	2776.90			0.0	0.0
1.5		-11.035	0.0		-32.402	0.0			0.0	0.0
1.6		-18.490	0.0		-54.016	0.0			0.0	0.0
1.7		-25.945	0.0		-75.630	0.0			0.0	0.0
1.8		-35.984	0.0		-97.243	0.0			0.0	0.0
1.9		-46.551	0.0		-118.857	0.0			0.0	0.0
2.0L	110.704	-54.006	-2538.78	277.143	-140.471	-6933.91		0.0	0.0	0.0

	TRUCK LOAD 1				TRUCK LOAD 2				TRUCK LOAD 3			
POINT	REACTION	SHEAR	+MOMENT	-MOMENT	REACTION	SHEAR	+MOMENT	-MOMENT	REACTION	SHEAR	+MOMENT	-MOMENT
1.0R	0.0	0.0	0.0	0.0	0.0	0.0	0.0	0.0	0.0	0.0	0.0	0.0
1.1		0.0	0.0	0.0		0.0	0.0	0.0		0.0	0.0	0.0
1.2		0.0	0.0	0.0		0.0	0.0	0.0		0.0	0.0	0.0
1.3		0.0	0.0	0.0		0.0	0.0	0.0		0.0	0.0	0.0
1.4		0.0	0.0	0.0		0.0	0.0	0.0		0.0	0.0	0.0
1.5		0.0	0.0	0.0		0.0	0.0	0.0		0.0	0.0	0.0
1.6		0.0	0.0	0.0		0.0	0.0	0.0		0.0	0.0	0.0
1.7		0.0	0.0	0.0		0.0	0.0	0.0		0.0	0.0	0.0
1.8		0.0	0.0	0.0		0.0	0.0	0.0		0.0	0.0	0.0
1.9		0.0	0.0	0.0		0.0	0.0	0.0		0.0	0.0	0.0
2.0L	0.0	0.0	0.0	0.0	0.0	0.0	0.0	0.0	0.0	0.0	0.0	0.0

NOTE, -MOMENT IS A MOMENT THAT CAUSES TENSION ON THE OUTSIDE OF THE STRUCTURE

WYOMING HIGHWAY DEPARTMENT
BRIDGE DESIGN DIVISION

DATE
PAGE NO 12

SAMPLE PROBLEM FOR A 2 SPAN COMPOSITE STEEL GIRDER BRIDGE DL 741570PCWW3DES
** GIRDER MOMENTS, SHEARS, AND REACTIONS **

SPAN LENGTH OF NO. 2=203.00 FT
GIRDER WEIGHT= 0.35 KIPS/FT SUPERIMPOSED DEAD LOAD= 1.01 KIPS/FT E(MODULUS)= 29000 KIPS/SQ
LIVE LOAD WHEEL FRACTION= 0.0

	DEAD LOAD GIRDER			SUPERIMPOSED DEAD LOAD			POINT LOADING			
POINT	REACTION	SHEAR	MOMENT	REACTION	SHEAR	MOMENT	LOADING	REACTION	SHEAR	MOMEN
2.0R	110.704	52.539	-2538.78	277.143	136.672	-6933.91		0.0	0.0	0.0
2.1		42.474	0.0		116.169	0.0			0.0	0.0
2.2		32.927	0.0		95.666	0.0			0.0	0.0
2.3		25.855	0.0		75.163	0.0			0.0	0.0
2.4		18.784	0.0		54.660	0.0			0.0	0.0
2.5		11.712	605.68		34.157	1735.66			0.0	0.0
2.6		4.640	0.0		13.654	0.0			0.0	0.0
2.7		-2.432	0.0		-6.849	0.0			0.0	0.0
2.8		-9.503	0.0		-27.352	0.0			0.0	0.0
2.9		-16.575	0.0		-47.855	0.0			0.0	0.0
3.0L	23.647	-23.647	-0.00	68.358	-68.358	-0.00		0.0	0.0	0.0

	TRUCK LOAD 1				TRUCK LOAD 2				TRUCK LOAD 3			
POINT	REACTION	SHEAR	+MOMENT	-MOMENT	REACTION	SHEAR	+MOMENT	-MOMENT	REACTION	SHEAR	+MOMENT	-MOMEN
2.0R	0.0	0.0	0.0	0.0	0.0	0.0	0.0	0.0	0.0	0.0	0.0	0.0
2.1		0.0	0.0	0.0		0.0	0.0	0.0		0.0	0.0	0.0
2.2		0.0	0.0	0.0		0.0	0.0	0.0		0.0	0.0	0.0
2.3		0.0	0.0	0.0		0.0	0.0	0.0		0.0	0.0	0.0
2.4		0.0	0.0	0.0		0.0	0.0	0.0		0.0	0.0	0.0
2.5		0.0	0.0	0.0		0.0	0.0	0.0		0.0	0.0	0.0
2.6		0.0	0.0	0.0		0.0	0.0	0.0		0.0	0.0	0.0
2.7		0.0	0.0	0.0		0.0	0.0	0.0		0.0	0.0	0.0
2.8		0.0	0.0	0.0		0.0	0.0	0.0		0.0	0.0	0.0
2.9		0.0	0.0	0.0		0.0	0.0	0.0		0.0	0.0	0.0
3.0L	0.0	0.0	0.0	0.0	0.0	0.0	0.0	0.0	0.0	0.0	0.0	0.0

NOTE, -MOMENT IS A MOMENT THAT CAUSES TENSION ON THE OUTSIDE OF THE STRUCTURE

SAMPLE PROBLEM FOR A 2 SPAN COMPOSITE STEEL GIRDER BRIDGE DL 741570PCWW3DES
** MAXIMUM MOMENTS, SHEARS, REACTIONS, & DEFLECTIONS **

SPAN LENGTH OF NO. 1=214.00 FT
GIRDER WEIGHT= 0.35 KIPS/FT SUPERIMPOSED DEAD LOAD= 1.01 KIPS/FT E(MODULUS)= 29000 KIPS/SQ I

DESIGN VALUES

	1.0R	1.1	1.2	1.3	1.4	1.5	1.6	1.7	1.8	1.9	2.0
REACTION	101.9										387.
SHEAR	101.9	72.8	43.8	14.7	-14.4	-43.4	-72.5	-101.6	-133.2	-165.4	-194.
+MOMENTS	0.0	0.0	0.0	0.0	3746.7	0.0	0.0	0.0	0.0	0.0	-9472.
-MOMENTS	0.0	0.0	0.0	0.0	3746.7	0.0	0.0	0.0	0.0	0.0	-9472.

DEFLECTIONS

	1.0R	1.1	1.2	1.3	1.4	1.5	1.6	1.7	1.8	1.9	2.0
DEAD DEC	0.0	0.031	0.061	0.092	0.116	0.101	0.079	0.058	0.037	0.015	0.0
FT											
LOAD ERA	0 0	0 6	0 12	1 2	1 6	1 3	0 15	0 11	0 7	0 3	0
IN	16	16	16	16	16	16	16	16	16	16	1

SPAN LENGTH OF NO. 2=203.00 FT
GIRDER WEIGHT= 0.35 KIPS/FT SUPERIMPOSED DEAD LOAD= 1.01 KIPS/FT E(MODULUS)= 29000 KIPS/SQ I

DESIGN VALUES

	2.0R	2.1	2.2	2.3	2.4	2.5	2.6	2.7	2.8	2.9	3.0
REACTION	387.8										92.
SHEAR	189.2	158.6	128.6	101.0	73.4	45.9	18.3	-9.3	-36.9	-64.4	-92.
+MOMENTS	-9472.7	0.0	0.0	0.0	0.0	2341.3	0.0	0.0	0.0	0.0	-0.
-MOMENTS	-9472.7	0.0	0.0	0.0	0.0	2341.3	0.0	0.0	0.0	0.0	-0.

DEFLECTIONS

	2.0R	2.1	2.2	2.3	2.4	2.5	2.6	2.7	2.8	2.9	3.0
DEAD DEC	0.0	0.010	0.025	0.040	0.055	0.067	0.056	0.042	0.028	0.014	0.0
FT											
LOAD ERA	0 0	0 2	0 5	0 8	0 11	0 13	0 11	0 8	0 5	0 3	0
IN	16	16	16	16	16	16	16	16	16	16	1

NOW CALLING 1BRSYS33

WYOMING HIGHWAY DEPARTMENT
BRIDGE DIVISION
DEFLECTIONS INFLUENCE LINES

DATE
PAGE NO. 14

SAMPLE PROBLEM FOR A 2 SPAN COMPOSITE STEEL GIRDER BRIDGE DL 741570PCWW3DES

LOAD POINTS	DEF@ 1.1	DEF@ 1.2	DEF@ 1.3	DEF@ 1.4	DEF@ 1.5
1.1	0.000982	0.001965	0.002947	0.003723	0.003265
1.2	0.001984	0.003969	0.005953	0.007522	0.006596
1.3	0.003026	0.006053	0.009079	0.011472	0.010062
1.4	0.004128	0.008256	0.012385	0.015649	0.013729
1.5	0.003172	0.006345	0.009517	0.012024	0.010539
1.6	0.002316	0.004632	0.006948	0.008777	0.007685
1.7	0.001579	0.003159	0.004738	0.005985	0.005233
1.8	0.000962	0.001924	0.002885	0.003644	0.003182
1.9	0.000440	0.000880	0.001320	0.001667	0.001453
AREA 1	0.001859	0.003718	0.005577	0.007046	0.006174

	DEF@ 1.6	DEF@ 1.7	DEF@ 1.8	DEF@ 1.9		UNIT MOM. 1.0R	UNIT MOM. 2.0L
1.1	0.002600	0.001936	0.001271	0.000607	DEF@ 1.1	0.000470	0.000252
1.2	0.005255	0.003913	0.002572	0.001230	DEF@ 1.2	0.000790	0.000488
1.3	0.008018	0.005974	0.003930	0.001886	DEF@ 1.3	0.000976	0.000690
1.4	0.010945	0.008160	0.005376	0.002592	DEF@ 1.4	0.001046	0.000842
1.5	0.008389	0.006239	0.004089	0.001938	DEF@ 1.5	0.001017	0.000928
1.6	0.006106	0.004526	0.002947	0.001367	DEF@ 1.6	0.000904	0.000931
1.7	0.004149	0.003064	0.001980	0.000895	DEF@ 1.7	0.000724	0.000833
1.8	0.002517	0.001852	0.001187	0.000521	DEF@ 1.8	0.000499	0.000631
1.9	0.001147	0.000840	0.000534	0.000227	DEF@ 1.9	0.000253	0.000350
AREA 1	0.004912	0.003650	0.002388	0.001126			

WYOMING HIGHWAY DEPARTMENT
BRIDGE DIVISION
DEFLECTIONS INFLUENCE LINES

DATE
PAGE NO. 15

SAMPLE PROBLEM FOR A 2 SPAN COMPOSITE STEEL GIRDER BRIDGE DL 741570PCWW3DES

LOAD POINTS	DEF@ 2.1	DEF@ 2.2	DEF@ 2.3	DEF@ 2.4	DEF@ 2.5
2.1	0.000362	0.000787	0.001212	0.001637	0.001957
2.2	0.000801	0.001716	0.002632	0.003547	0.004236
2.3	0.001332	0.002814	0.004297	0.005779	0.006895
2.4	0.001977	0.004124	0.006270	0.008417	0.010031
2.5	0.002738	0.005646	0.008553	0.011461	0.013645
2.6	0.002075	0.004304	0.006533	0.008762	0.010437
2.7	0.001489	0.003104	0.004719	0.006334	0.007549
2.8	0.000961	0.002010	0.003060	0.004110	0.004899
2.9	0.000471	0.000988	0.001504	0.002021	0.002410
AREA 2	0.001158	0.002418	0.003679	0.004939	0.005887

	DEF@ 2.6	DEF@ 2.7	DEF@ 2.8	DEF@ 2.9		UNIT MOM. 2.0R	UNIT MOM. 3.0L
2.1	0.001649	0.001237	0.000825	0.000412	DEF@ 2.1	0.000314	0.000228
2.2	0.003570	0.002677	0.001785	0.000892	DEF@ 2.2	0.000566	0.000448
2.3	0.005809	0.004357	0.002905	0.001452	DEF@ 2.3	0.000748	0.000651
2.4	0.008450	0.006338	0.004225	0.002113	DEF@ 2.4	0.000836	0.000813
2.5	0.011494	0.008621	0.005747	0.002874	DEF@ 2.5	0.000834	0.000915
2.6	0.008793	0.006594	0.004396	0.002198	DEF@ 2.6	0.000757	0.000941
2.7	0.006359	0.004770	0.003180	0.001590	DEF@ 2.7	0.000620	0.000878
2.8	0.004128	0.003096	0.002064	0.001032	DEF@ 2.8	0.000438	0.000710
2.9	0.002030	0.001523	0.001015	0.000508	DEF@ 2.9	0.000227	0.000423
AREA 2	0.004960	0.003720	0.002480	0.001240			

WYOMING HIGHWAY DEPARTMENT
BRIDGE DESIGN DIVISION

DATE Q
PAGE NO 16

& S OK 0 0 &> D - C8 C 0 & 1 1 * D & 1-

WORK CODE	DATA CODE	ENTRY 1	ENTRY 2	ENTRY 3	ENTRY 4	ENTRY 5	ENTRY 6
DC	5	10.00000	0.0	1.00000	0.0	0.0	0.0 *
	501	0.0	0.0	0.0	0.55000	0.0	0.0
	502	0.0	0.0	0.0	0.75000	0.0	0.0
	510	1.00000	1.00000	2.00000	1.00000	0.0	0.0
	530	104.00000	2.00000	50000.00000	0.0	0.0	0.0
	531	0.0	102.00000	0.0	0.0	1.00000	0.0
	530	110.00000	2.00000	50000.00000	0.0	0.0	0.0
	531	0.0	102.00000	0.0	0.0	1.00000	16.00000
	530	200.00000	2.00000	50000.00000	0.0	0.0	0.0
	531	0.0	102.00000	0.0	0.0	1.00000	16.00000
	530	205.00000	2.00000	50000.00000	0.0	0.0	0.0
	531	0.0	102.00000	0.0	0.0	1.00000	0.0

SAMPLE PROBLEM FOR A 2 SPAN COMPOSITE STEEL GIRDER BRIDGE DL 741570PCWW3DES

STRUCTURAL STEEL REVIEW

SPAN 1 @ 4 TENTHS POINT

INPUT SECTION DIMENSIONS

DEPTH OF WEB	102.00	TOP FLANGE THICKNESS	1.00	BOTTOM FLANGE THICKNESS	1.50
THICKNESS OF WEB	0.56	TOP FLANGE WIDTH	15.00	BOTTOM FLANGE WIDTH	20.00

MATERIALS FACTOR

YIELD STRENGTH OF WEB 50000. YIELD STR. OF TOP FLNG. 50000. YIELD STR. OF BOT. FLNG. 50000.

APPLIED ACTIONS

	DEAD LOAD	TRUCK # 1 POSITIVE	TRUCK # 1 NEGATIVE	TRUCK # 2 POSITIVE	TRUCK # 2 NEGATIVE	TRUCK # 3 POSITIVE	TRUCK # 3 NEGATIVE
MOMENT Z-Z	3746.68	0.0	0.0	0.0	0.0	0.0	0.0
SHEAR Y-Z	-14.37	0.0		0.0		0.0	

FIRST LOADING

ALLOWABLE STRESSES

FLEXURE, IN WEB	27500.	COMPOSITE CONCRETE	0.
SHEAR IN WEB	16500.	BEARING STIFFENERS	0.

ACTUAL STRESSES

DESIGN POINTS

	ONE	TWO	THREE	FOUR	FIVE	SIX	SEVEN
FLEXURE (POS. MOM)	0.	16351.	16077.	0.	11898.	12309.	12309.
SHEAR-N(HORIZONTAL)	0.	0.	0.	0.	0.	0.	0.
SHEAR-P(HORIZONTAL)	0.	0.	138.	289.	206.	0.	0.
SHEAR IN WEB (VERTICAL)				250.			

AXIAL STRESS 2. MAX COMBINED STRESS (POS) 16353. MAX COMBINED STRESS (NEG) 2.

MINIMUM WEB THICKNESS CRITERIA

WITH OUT STIFFENERS 0.680 WITH TRANSVERSE STIFF. 0.147 WITH LONGITUDINAL STIFF. 0.300

STIFFENER DATA

TRANSVERSE STIFFENER-SPACING 102.00 MOMENT OF INERTIA 8.31

LONGITUDINAL STIFFENER-MOMENT OF INERTIA 41.21 WIDTH 6.83 THICKNESS 0.39

SAMPLE PROBLEM FOR A 2 SPAN COMPOSITE STEEL GIRDER BRIDGE DL 741570PCWW3DES

STRUCTURAL STEEL REVIEW

SPAN 1 @ 10 TENTHS POINT

INPUT SECTION DIMENSIONS

DEPTH OF WEB	144.00	TOP FLANGE THICKNESS	2.00	BOTTOM FLANGE THICKNESS	2.00
THICKNESS OF WEB	0.56	TOP FLANGE WIDTH	20.00	BOTTOM FLANGE WIDTH	20.00

MATERIALS FACTOR

YIELD STRENGTH OF WEB 50000. YIELD STR. OF TOP FLNG. 50000. YIELD STR. OF BOT. FLNG. 50000.

APPLIED ACTIONS

	DEAD LOAD	TRUCK # 1 POSITIVE	TRUCK # 1 NEGATIVE	TRUCK # 2 POSITIVE	TRUCK # 2 NEGATIVE	TRUCK # 3 POSITIVE	TRUCK # 3 NEGATIVE
MOMENT Z-Z	-9472.70	0.0	0.0	0.0	0.0	0.0	0.0
SHEAR Y-Z	-194.48	0.0		0.0		0.0	

FIRST LOADING

ALLOWABLE STRESSES

FLEXURE, IN WEB	27500.	COMPOSITE CONCRETE	0.
SHEAR IN WEB	16500.	BEARING STIFFENERS	21945.

ACTUAL STRESSES

	DESIGN POINTS ONE	TWO	THREE	FOUR	FIVE	SIX	SEVEN
FLEXURE (NEG. MOM)	0.	14854.	14452.	0.	14452.	14854.	0.
SHEAR-N(HORIZONTAL)	0.	0.	1783.	2673.	1783.	0.	0.
SHEAR-P(HORIZONTAL)	0.	0.	0.	0.	0.	0.	0.
SHEAR IN WEB (VERTICAL)				2401.			

AXIAL STRESS 2. MAX COMBINED STRESS (POS) 2. MAX COMBINED STRESS (NEG) 14855.

MINIMUM WEB THICKNESS CRITERIA

WITH OUT STIFFENERS 0.960 WITH TRANSVERSE STIFF. 0.641 WITH LONGITUDINAL STIFF. 0.424

STIFFENER DATA

TRANSVERSE STIFFENER-SPACING 126.28 MOMENT OF INERTIA 20.80

LONGITUDINAL STIFFENER-MOMENT OF INERTIA 27.53 WIDTH 6.25 THICKNESS 0.34

BEARING STIFFENERS -AREA 0.0 WIDTH 9.50 THICKNESS 0.75

SAMPLE PROBLEM FOR A 2 SPAN COMPOSITE STEEL GIRDER BRIDGE DL 741570PCWW3DES

STRUCTURAL STEEL REVIEW

SPAN 2 @ 0 TENTHS POINT

INPUT SECTION DIMENSIONS

DEPTH OF WEB	144.00	TOP FLANGE THICKNESS	2.00	BOTTOM FLANGE THICKNESS	2.00
THICKNESS OF WEB	0.56	TOP FLANGE WIDTH	20.00	BOTTOM FLANGE WIDTH	20.00

MATERIALS FACTOR

YIELD STRENGTH OF WEB 50000. YIELD STR. OF TOP FLNG. 50000. YIELD STR. OF BOT. FLNG. 50000.

APPLIED ACTIONS

	DEAD LOAD	TRUCK # 1 POSITIVE	TRUCK # 1 NEGATIVE	TRUCK # 2 POSITIVE	TRUCK # 2 NEGATIVE	TRUCK # 3 POSITIVE	TRUCK # 3 NEGATIVE
MOMENT Z-Z	-9472.70	0.0	0.0	0.0	0.0	0.0	0.0
SHEAR Y-Z	189.21	0.0		0.0		0.0	

FIRST LOADING

ALLOWABLE STRESSES

FLEXURE, IN WEB	27500.	COMPOSITE CONCRETE	0.
SHEAR IN WEB	16500.	BEARING STIFFENERS	21945.

ACTUAL STRESSES

	DESIGN POINTS ONE	TWO	THREE	FOUR	FIVE	SIX	SEVEN
FLEXURE (NEG. MOM)	0.	14853.	14452.	0.	14452.	14853.	0.
SHEAR-N(HORIZONTAL)	0.	0.	1734.	2600.	1734.	0.	0.
SHEAR-P(HORIZONTAL)	0.	0.	1783.	2673.	1783.	0.	0.
SHEAR IN WEB (VERTICAL)				2336.			

AXIAL STRESS 2. MAX COMBINED STRESS (POS) 14855. MAX COMBINED STRESS (NEG) 14855.

MINIMUM WEB THICKNESS CRITERIA

WITH OUT STIFFENERS 0.960 WITH TRANSVERSE STIFF. 0.633 WITH LONGITUDINAL STIFF. 0.424

STIFFENER DATA

TRANSVERSE STIFFENER-SPACING 128.02 MOMENT OF INERTIA 19.33

LONGITUDINAL STIFFENER-MOMENT OF INERTIA 27.53 WIDTH 6.25 THICKNESS 0.34

BEARING STIFFENERS -AREA 0.0 WIDTH 9.50 THICKNESS 0.75

SAMPLE PROBLEM FOR A 2 SPAN COMPOSITE STEEL GIRDER BRIDGE DL 741570PCWW3DES

STRUCTURAL STEEL REVIEW

SPAN 2 @ 5 TENTHS POINT

INPUT SECTION DIMENSIONS

DEPTH OF WEB	102.00	TOP FLANGE THICKNESS	1.00	BOTTOM FLANGE THICKNESS	1.50
THICKNESS OF WEB	0.56	TOP FLANGE WIDTH	15.00	BOTTOM FLANGE WIDTH	20.00

MATERIALS FACTOR

YIELD STRENGTH OF WEB 50000. YIELD STR. OF TOP FLNG. 50000. YIELD STR. OF BOT. FLNG. 50000.

APPLIED ACTIONS

	DEAD LOAD	TRUCK # 1 POSITIVE	TRUCK # 1 NEGATIVE	TRUCK # 2 POSITIVE	TRUCK # 2 NEGATIVE	TRUCK # 3 POSITIVE	TRUCK # 3 NEGATIVE
MOMENT Z-Z	2341.34	0.0	0.0	0.0	0.0	0.0	0.0
SHEAR Y-Y	45.87	0.0		0.0		0.0	

FIRST LOADING

ALLOWABLE STRESSES

FLEXURE, IN WEB	27500.	COMPOSITE CONCRETE	0.
SHEAR IN WEB	16500.	BEARING STIFFENERS	0.

ACTUAL STRESSES

	DESIGN POINTS ONE	TWO	THREE	FOUR	FIVE	SIX	SEVEN
FLEXURE (POS. MOM)	0.	10218.	10047.	0.	7435.	7692.	7692.
SHEAR-N(HORIZONTAL)	0.	0.	0.	0.	0.	0.	0.
SHEAR-P(HORIZONTAL)	0.	0.	441.	922.	659.	0.	0.
SHEAR IN WEB (VERTICAL)				799.			

AXIAL STRESS 2. MAX COMBINED STRESS (POS) 10220. MAX COMBINED STRESS (NEG) 2.

MINIMUM WEB THICKNESS CRITERIA

WITH OUT STIFFENERS 0.680 WITH TRANSVERSE STIFF. 0.262 WITH LONGITUDINAL STIFF. 0.300

STIFFENER DATA

TRANSVERSE STIFFENER-SPACING 102.00 MOMENT OF INERTIA 8.31

LONGITUDINAL STIFFENER-MOMENT OF INERTIA 41.21 WIDTH 7.24 THICKNESS 0.33

NOW CALLING 18RSYS00

FORM C-16
Rev. 3/11/69

WYOMING STATE HIGHWAY DEPARTMENT
CHEYENNE WYOMING
BRIDGE DIVISION

SHEET NO. 3 OF 5
BY DAG DATE 9-27-73
CHECKED

//EXEC BRSYSØØ

DESIGN SYSTEM

Employee No. 68	Dept. Code	P or D	Job Code 75	Work Code	Str. No.

1 COMMENT CARD

1ØØ	SAMPLE PROBLEM FOR A 2 SPAN COMPOSITE STEEL GIRDER BRIDGE LL

1 2 WORK CODE	3 5 DATA CODE	ENTRY 1 (6–15)	ENTRY 2 (25)	ENTRY 3 (35)	ENTRY 4 (45)	ENTRY 5 (55)	ENTRY 6 (65)	66 CONT
DC	ØØ1	Ø1111.	2.	2.				
	1ØØ	1Ø4.	11Ø.	2ØØ.	2Ø5.			
	1Ø1	1.	214.		164.	3.	1Ø2.	
	1Ø2	144.	1Ø2.					
	1Ø3	159.	1.	159.	2.	214.	2.	
	1Ø1	2.	2Ø3.	5Ø.	2Ø3.	3.	144.	
	1Ø2	1Ø2.	1Ø2.					
	1Ø3	55.	2.	55.	1.	2Ø3.	1.	
	111	1.	.5625	2Ø.	15.	1.	1.5	
	112							
	113			1Ø2.	8.5		1Ø.	
	111	2.	.5625	2Ø.	2Ø.	2.	2.	
DC	ØØ2	1Ø1111.	1.97	1ØØ.				
	2Ø1			29ØØØ.				
	3Ø1	13.	4.	14.	16.	14.	16.	
	3Ø2	3Ø.						

TRAILER CARD

ØØØ	

1 3

NOTE: A trailer card must follow the last structure card containing data

FORM C-16
Rev. 3/11/69

WYOMING STATE HIGHWAY DEPARTMENT
CHEYENNE WYOMING
BRIDGE DIVISION

DESIGN SYSTEM

SHEET NO. 4 OF 5
BY DAG DATE 9-27-73
CHECKED

Employee No. 68	Dept. Code	P or D	Job Code 75	Work Code	Str. No.

//EXEC BRSYSØØ

1 COMMENT CARD

1	2
ØØØ	

1 WORK	2 CODE	3 DATA	5 CODE	ENTRY 1 (6–15)	ENTRY 2 (25)	ENTRY 3 (35)	ENTRY 4 (45)	ENTRY 5 (55)	ENTRY 6 (65)	66 CONT
		3Ø9		.32	9.	13.				
	DC	ØØ5		1Ø.		2.				
		5Ø1				.4	.55			
		5Ø2				.55	.75			
		51Ø		1.	5.	2.	1.			
		53Ø		1Ø4.	4.	5ØØØØ.			1Ø.	1
		531			1Ø2.			1.		1
		532								1
		533				325Ø.				
		53Ø		11Ø.	2.	5ØØØØ.				1
		531			1Ø2.			1.	16.	
		53Ø		2ØØ.	2.	5ØØØØ.				1
		531			1Ø2.			1.	16.	
		53Ø		2Ø5.	2.	5ØØØØ.			1Ø.	1
		531			1Ø2.			1.		1
		532								1

TRAILER CARD

1	3
ØØØ	

NOTE: A trailer card must follow the last structure card containing data

FORM C-16
Rev. 3/11/69

WYOMING STATE HIGHWAY DEPARTMENT
CHEYENNE WYOMING
BRIDGE DIVISION

SHEET NO. 5 OF 5
BY DAG DATE 9-27-73
CHECKED

//EXEC BRSYSØØ

DESIGN SYSTEM

Employee No. 68	Dept. Code	P or D	Job Code 75	Work Code	Str. No.

1 COMMENT CARD

1 2 WORK CODE	3 5 DATA CODE	ENTRY 1 (6–15)	ENTRY 2 (25)	ENTRY 3 (35)	ENTRY 4 (45)	ENTRY 5 (55)	ENTRY 6 (65)	66 CONT
	533			3250.				

TRAILER CARD

1 3
999

NOTE: A trailer card must follow the last structure card containing data

WYOMING HIGHWAY DEPARTMENT
BRIDGE DESIGN DIVISION

DATE
PAGE NO. 1

SAMPLE PROBLEM FOR A 2 SPAN COMPOSITE STEEL GIRDER BRIDGE LL
INPUT AS RECEIVED BY COMPUTER

WORK CODE	DATA CODE	ENTRY 1	ENTRY 2	ENTRY 3	ENTRY 4	ENTRY 5	ENTRY 6
DC	1	1111.00000	2.00000	2.00000	0.0	0.0	0.0
	100	104.00000	110.00000	200.00000	205.00000	0.0	0.0
	101	1.00000	214.00000	0.0	164.00000	3.00000	102.00000
	102	144.00000	102.00000	0.0	0.0	0.0	0.0
	103	159.00000	1.00000	159.00000	2.00000	214.00000	2.00000
	101	2.00000	203.00000	50.00000	203.00000	3.00000	144.00000
	102	102.00000	102.00000	0.0	0.0	0.0	0.0
	103	55.00000	2.00000	55.00000	1.00000	203.00000	1.00000
	111	1.00000	0.56250	20.00000	15.00000	1.00000	1.50000
	112	0.0	0.0	0.0	0.0	0.0	0.0
	113	0.0	0.0	102.00000	8.50000	0.0	10.00000
	111	2.00000	0.56250	20.00000	20.00000	2.00000	2.00000

SAMPLE PROBLEM FOR A 2 SPAN CCMPCSITE STEEL GIRDER BRIDGE LL

BEAM PROPERTIES — PARABOLIC DEPTH VARIATION.

SPAN NO. 1 SPAN LENGTH = 214.000 SPAN RATIO = 1.000

POINT	BEAM DEPTH	XSECT AREA	MOMENTS OF INERTIA	DIST TO CENT(X)	WIDTH OF WEB	FLANGE THICKNESS TOP	FLANGE THICKNESS BOT	FLANGE WIDTH TOP	FLANGE WIDTH BOT
1.00	102.00	102.4	355952.	74.2	0.563	1.000	1.500	15.00	20.00
1.05	102.00	102.4	355952.	74.2	0.563	1.000	1.500	15.00	20.00
1.10	102.00	102.4	355952.	74.2	0.563	1.000	1.500	15.00	20.00
1.15	102.00	102.4	355952.	74.2	0.563	1.000	1.500	15.00	20.00
1.20	102.00	102.4	355952.	74.2	0.563	1.000	1.500	15.00	20.00
1.25	102.00	102.4	355952.	74.2	0.563	1.000	1.500	15.00	20.00
1.30	102.00	102.4	355952.	74.2	0.563	1.000	1.500	15.00	20.00
1.35	102.00	102.4	355952.	74.2	0.563	1.000	1.500	15.00	20.00
1.40	102.00	102.4	355952.	74.2	0.563	1.000	1.500	15.00	20.00
1.45	102.00	102.4	355952.	74.2	0.563	1.000	1.500	15.00	20.00
1.50	102.00	102.4	355952.	74.2	0.563	1.000	1.500	15.00	20.00
1.55	102.00	102.4	355952.	74.2	0.563	1.000	1.500	15.00	20.00
1.60	102.00	102.4	355952.	74.2	0.563	1.000	1.500	15.00	20.00
1.65	102.00	102.4	355952.	74.2	0.563	1.000	1.500	15.00	20.00
1.70	102.00	102.4	355952.	74.2	0.563	1.000	1.500	15.00	20.00
1.75	102.00	137.4	266091.	53.0	0.563	2.000	2.000	20.00	20.00
1.80	102.87	137.9	271014.	53.4	0.563	2.000	2.000	20.00	20.00
1.85	107.38	140.4	297361.	55.7	0.563	2.000	2.000	20.00	20.00
1.90	115.74	145.1	349968.	59.9	0.563	2.000	2.000	20.00	20.00
1.95	127.95	152.0	435936.	66.0	0.563	2.000	2.000	20.00	20.00
2.00	144.00	161.0	566314.	74.0	0.563	2.000	2.000	20.00	20.00

FIXED END MOMENTS — STIFFNESS — CARRY OVERS

KAC= 4.0342 KCA= 3.9588 CAC= 0.5055 CCA= 0.5151

	FAC	FCA
1.10	-0.0808	0.0092
1.20	-0.1274	0.0328
1.30	-0.1458	0.0648
1.40	-0.1420	0.0992
1.50	-0.1223	0.1299
1.60	-0.0925	0.1511
1.70	-0.0588	0.1567
1.80	-0.0278	0.1384
1.90	-0.0069	0.0858

SAMPLE PROBLEM FOR A 2 SPAN COMPOSITE STEEL GIRDER BRIDGE LL

BEAM PROPERTIES CONTINUE

SPAN NO. 1 MODULUS OF ELASTICITY = 10.0

	COVER PLT. THICKNESS		COVER PLT. WIDTH		DIST. - COVER PLT.		AREA STEEL		DIST. - STEEL	
POINT	TOP	BOT	TOP	BOT	TOP	BOT	TOP	BOT	TOP	BOT
1.00	8.50	0.0	102.00	0.0	0.0	0.0	0.0	0.0	0.0	0.0
1.05	8.50	0.0	102.00	0.0	0.0	0.0	0.0	0.0	0.0	0.0
1.10	8.50	0.0	102.00	0.0	0.0	0.0	0.0	0.0	0.0	0.0
1.15	8.50	0.0	102.00	0.0	0.0	0.0	0.0	0.0	0.0	0.0
1.20	8.50	0.0	102.00	0.0	0.0	0.0	0.0	0.0	0.0	0.0
1.25	8.50	0.0	102.00	0.0	0.0	0.0	0.0	0.0	0.0	0.0
1.30	8.50	0.0	102.00	0.0	0.0	0.0	0.0	0.0	0.0	0.0
1.35	8.50	0.0	102.00	0.0	0.0	0.0	0.0	0.0	0.0	0.0
1.40	8.50	0.0	102.00	0.0	0.0	0.0	0.0	0.0	0.0	0.0
1.45	8.50	0.0	102.00	0.0	0.0	0.0	0.0	0.0	0.0	0.0
1.50	8.50	0.0	102.00	0.0	0.0	0.0	0.0	0.0	0.0	0.0
1.55	8.50	0.0	102.00	0.0	0.0	0.0	0.0	0.0	0.0	0.0
1.60	8.50	0.0	102.00	0.0	0.0	0.0	0.0	0.0	0.0	0.0
1.65	8.50	0.0	102.00	0.0	0.0	0.0	0.0	0.0	0.0	0.0
1.70	8.50	0.0	102.00	0.0	0.0	0.0	0.0	0.0	0.0	0.0
1.75	0.0	0.0	0.0	0.0	0.0	0.0	0.0	0.0	0.0	0.0
1.80	0.0	0.0	0.0	0.0	0.0	0.0	0.0	0.0	0.0	0.0
1.85	0.0	0.0	0.0	0.0	0.0	0.0	0.0	0.0	0.0	0.0
1.90	0.0	0.0	0.0	0.0	0.0	0.0	0.0	0.0	0.0	0.0
1.95	0.0	0.0	0.0	0.0	0.0	0.0	0.0	0.0	0.0	0.0
2.00	0.0	0.0	0.0	0.0	0.0	0.0	0.0	0.0	0.0	0.0

SAMPLE PROBLEM FOR A 2 SPAN COMPOSITE STEEL GIRDER BRIDGE LL

BEAM PROPERTIES — PARABOLIC DEPTH VARIATION.

SPAN NO. 2 SPAN LENGTH = 203.000 SPAN RATIO = 0.949

POINT	BEAM DEPTH	XSECT AREA	MOMENTS OF INERTIA	DIST TO CENT(X)	WIDTH OF WEB	FLANGE THICKNESS TOP	FLANGE THICKNESS BOT	FLANGE WIDTH TOP	FLANGE WIDTH BOT
2.00	144.00	161.0	566315.	74.0	0.563	2.000	2.000	20.00	20.00
2.05	128.68	152.4	441441.	66.3	0.563	2.000	2.000	20.00	20.00
2.10	116.82	145.7	357114.	60.4	0.563	2.000	2.000	20.00	20.00
2.15	108.42	141.0	303625.	56.2	0.563	2.000	2.000	20.00	20.00
2.20	103.48	138.2	274514.	53.7	0.563	2.000	2.000	20.00	20.00
2.25	102.00	137.4	266091.	53.0	0.563	2.000	2.000	20.00	20.00
2.30	102.00	102.4	355952.	74.2	0.563	1.000	1.500	15.00	20.00
2.35	102.00	102.4	355952.	74.2	0.563	1.000	1.500	15.00	20.00
2.40	102.00	102.4	355952.	74.2	0.563	1.000	1.500	15.00	20.00
2.45	102.00	102.4	355952.	74.2	0.563	1.000	1.500	15.00	20.00
2.50	102.00	102.4	355952.	74.2	0.563	1.000	1.500	15.00	20.00
2.55	102.00	102.4	355952.	74.2	0.563	1.000	1.500	15.00	20.00
2.60	102.00	102.4	355952.	74.2	0.563	1.000	1.500	15.00	20.00
2.65	102.00	102.4	355952.	74.2	0.563	1.000	1.500	15.00	20.00
2.70	102.00	102.4	355952.	74.2	0.563	1.000	1.500	15.00	20.00
2.75	102.00	102.4	355952.	74.2	0.563	1.000	1.500	15.00	20.00
2.80	102.00	102.4	355952.	74.2	0.563	1.000	1.500	15.00	20.00
2.85	102.00	102.4	355952.	74.2	0.563	1.000	1.500	15.00	20.00
2.90	102.00	102.4	355952.	74.2	0.563	1.000	1.500	15.00	20.00
2.95	102.00	102.4	355952.	74.2	0.563	1.000	1.500	15.00	20.00
3.00	102.00	102.4	355952.	74.2	0.563	1.000	1.500	15.00	20.00

STIFFNESS: KCE= 4.2106 KEC= 4.2587 CARRY OVERS: CCE= 0.5140 CEC= 0.5082

	FIXED END MOMENTS FCE	FEC
2.10	-0.0814	0.0066
2.20	-0.1315	0.0262
2.30	-0.1492	0.0555
2.40	-0.1440	0.0874
2.50	-0.1239	0.1157
2.60	-0.0946	0.1345
2.70	-0.0618	0.1381
2.80	-0.0313	0.1208
2.90	-0.0088	0.0767

SAMPLE PROBLEM FOR A 2 SPAN COMPOSITE STEEL GIRDER BRIDGE LL

BEAM PROPERTIES CONTINUE

SPAN NO. 2

MODULUS OF ELASTICITY = 1.0

	COVER PLT. THICKNESS		COVER PLT. WIDTH		DIST. - COVER PLT.		AREA STEEL		DIST. - STEEL	
POINT	TOP	BOT	TOP	BOT	TOP	BOT	TOP	BOT	TOP	BOT
2.00	0.0	0.0	0.0	0.0	0.0	0.0	0.0	0.0	0.0	0.0
2.05	0.0	0.0	0.0	0.0	0.0	0.0	0.0	0.0	0.0	0.0
2.10	0.0	0.0	0.0	0.0	0.0	0.0	0.0	0.0	0.0	0.0
2.15	0.0	0.0	0.0	0.0	0.0	0.0	0.0	0.0	0.0	0.0
2.20	0.0	0.0	0.0	0.0	0.0	0.0	0.0	0.0	0.0	0.0
2.25	0.0	0.0	0.0	0.0	0.0	0.0	0.0	0.0	0.0	0.0
2.30	8.50	0.0	102.00	0.0	0.0	0.0	0.0	0.0	0.0	0.0
2.35	8.50	0.0	102.00	0.0	0.0	0.0	0.0	0.0	0.0	0.0
2.40	8.50	0.0	102.00	0.0	0.0	0.0	0.0	0.0	0.0	0.0
2.45	8.50	0.0	102.00	0.0	0.0	0.0	0.0	0.0	0.0	0.0
2.50	8.50	0.0	102.00	0.0	0.0	0.0	0.0	0.0	0.0	0.0
2.55	8.50	0.0	102.00	0.0	0.0	0.0	0.0	0.0	0.0	0.0
2.60	8.50	0.0	102.00	0.0	0.0	0.0	0.0	0.0	0.0	0.0
2.65	8.50	0.0	102.00	0.0	0.0	0.0	0.0	0.0	0.0	0.0
2.70	8.50	0.0	102.00	0.0	0.0	0.0	0.0	0.0	0.0	0.0
2.75	8.50	0.0	102.00	0.0	0.0	0.0	0.0	0.0	0.0	0.0
2.80	8.50	0.0	102.00	0.0	0.0	0.0	0.0	0.0	0.0	0.0
2.85	8.50	0.0	102.00	0.0	0.0	0.0	0.0	0.0	0.0	0.0
2.90	8.50	0.0	102.00	0.0	0.0	0.0	0.0	0.0	0.0	0.0
2.95	8.50	0.0	102.00	0.0	0.0	0.0	0.0	0.0	0.0	0.0
3.00	8.50	0.0	102.00	0.0	0.0	0.0	0.0	0.0	0.0	0.0

SAMPLE PROBLEM FOR A 2 SPAN COMPOSITE STEEL GIRDER BRIDGE LL

STIFFNESS AND CARRYOVER FACTORS AS USED IN MATRIX INVERSION

SPAN NO.	STIFFNESS	CARRYOVERS	STIFFNESS
1	KAC=0.403423E 01	CAC=0.505469E 00	KCA=0.395881E 01
2	KCE=0.421059E 01	CCE=0.514013E 00	KEC=0.425875E 01
3	KEG=0.100000E-09	CEG=0.100000E 01	KGE=0.100000E-09
4	KGI=0.100000E-09	CGI=0.100000E 01	KIG=0.100000E-09
5	KIK=0.100000E-09	CIK=0.100000E 01	KKI=0.100000E-09
6	KKM=0.100000E-09	CKM=0.100000E 01	KMK=0.100000E-09
7	KAB=0.100000E-09	CAB=0.100000E 01	KBA=0.100000E-09
8	KCD=0.100000E-09	CCD=0.100000E 01	KDC=0.100000E-09
9	KEF=0.100000E-09	CEF=0.100000E 01	KFE=0.100000E-09
10	KGH=0.100000E-09	CGH=0.100000E 01	KHG=0.100000E-09
11	KIJ=0.100000E-09	CIJ=0.100000E 01	KJI=0.100000E-09
12	KKL=0.100000E-09	CKL=0.100000E 01	KLK=0.100000E-09
13	KMN=0.100000E-09	CMN=0.100000E 01	KNM=0.100000E-09
14	KBD=0.100000E-09	CBD=0.100000E 01	KDB=0.100000E-09
15	KDF=0.100000E-09	CDF=0.100000E 01	KFD=0.100000E-09
16	KFH=0.100000E-09	CFH=0.100000E 01	KHF=0.100000E-09
17	KHJ=0.100000E-09	CHJ=0.100000E 01	KJH=0.100000E-09
18	KJL=0.100000E-09	CJL=0.100000E 01	KLJ=0.100000E-09
19	KLN=0.100000E-09	CLN=0.100000E 01	KNL=0.100000E-09

SAMPLE PROBLEM FOR A 2 SPAN COMPOSITE STEEL GIRDER BRIDGE LL

2 4 1CT

CELL 8 ANALYSIS

```
MCA=+ 0.5151FCA+ 0.2464FEC+-0.2464FGE+ 0.2464FIG+-0.2464FKI+-0.2604FCA+-0.4849FCE+ 0.2464FEG+-0.2464FGI+
    + 0.2464FIK+-0.2464FKM+ 0.2464FMK+ 0.0        0.0        0.0        0.0        0.0        0.0
MEC=+-0.CCC0FCA+ 0.0   FEC+ 1.C000FGE+-1.0000FIG+ 1.0000FKI+-0.0000FCA+-0.0000FCE+-1.0000FEG+ 1.0000FGI+
    +-1.0C00FIK+ 1.0000FKM+-1.0000FMK+ 0.0        0.0        0.0        0.0        0.0        0.0
MGE=+ 0.CC00FCA+-0.0000FEC+ 0.0000FGE+ 1.0000FIG+-1.0000FKI+-0.0000FCA+ 0.0000FCE+-0.0000FEG+-1.0000FGI+
    + 1.CCC0FIK+-1.0000FKM+ 1.0000FMK+ 0.0        0.0        0.0        0.0        0.0        0.0
MIG=+-0.0C00FCA+ 0.0000FEC+-0.0000FGE+ 0.0000FIG+ 1.0000FKI+ 0.0000FCA+-0.0000FCE+ 0.0000FEG+-0.0000FGI+
    +-1.0000FIK+ 1.0000FKM+-1.0000FMK+ 0.0        0.0        0.0        0.0        0.0        0.0
MKI=+ 0.0   FCA+-0.0000FEC+ 0.0   FGE+-0.0000FIG+ 0.0000FKI+-0.0000FCA+ 0.0   FCE+-0.0000FEG+ 0.0   FGI+
    +-0.0000FIK+-1.0000FKM+ 1.0000FMK+ 0.0        0.0        0.0        0.0        0.0        0.0
```

SAMPLE PROBLEM FOR A 2 SPAN COMPOSITE STEEL GIRDER BRIDGE LL

2 4 1CT

CELL 8 ANALYSIS

WYOMING HIGHWAY DEPARTMENT
BRIDGE DESIGN DIVISION

DATE
PAGE NO. 9

SAMPLE PROBLEM FOR A 2 SPAN COMPOSITE STEEL GIRDER BRIDGE LL

INFLUENCE LINES

LOAD POINTS	V 1.OR	M 1.OR	M 1.1	M 1.2	M 1.3	M 1.4	M 1.5
1.1	0.874214	0.0	0.0	0.0	0.0	0.049685	0.0
1.2	0.749936	0.0	0.0	0.0	0.0	0.099974	0.0
1.3	0.628675	0.0	0.0	0.0	0.0	0.151470	0.0
1.4	0.511938	0.0	0.0	0.0	0.0	0.204775	0.0
1.5	0.401235	0.0	0.0	0.0	0.0	0.160494	0.0
1.6	0.298073	0.0	0.0	0.0	0.0	0.119229	0.0
1.7	0.203962	0.0	0.0	0.0	0.0	0.081585	0.0
1.8	0.121469	0.0	0.0	0.0	0.0	0.048587	0.0
1.9	0.054010	0.0	0.0	0.0	0.0	0.021604	0.0
2.1	-0.041068	0.0	0.0	0.0	0.0	-0.016427	0.0
2.2	-0.070239	0.0	0.0	0.0	0.0	-0.028096	0.0
2.3	-0.086036	0.0	0.0	0.0	0.0	-0.034414	0.0
2.4	-0.091389	0.0	0.0	0.0	0.0	-0.036556	0.0
2.5	-0.088599	0.0	0.0	0.0	0.0	-0.035440	0.0
2.6	-0.079022	0.0	0.0	0.0	0.0	-0.031609	0.0
2.7	-0.064017	0.0	0.0	0.0	0.0	-0.025607	0.0
2.8	-0.044940	0.0	0.0	0.0	0.0	-0.017976	0.0
2.9	-0.023149	0.0	0.0	0.0	0.0	-0.009259	0.0
AREA 1=	0.434351	0.0	0.0	0.0	0.0	0.093740	0.0
AREA 2=	-0.055821	0.0	0.0	0.0	0.0	-0.022328	0.0
SUM - =	-0.055821	0.0	0.0	0.0	0.0	-0.022328	0.0
SUM + =	0.434351	0.0	0.0	0.0	0.0	0.093740	0.0
SUM TOT	0.378530	0.0	0.0	0.0	0.0	0.071412	0.0

WYOMING HIGHWAY DEPARTMENT
BRIDGE DESIGN DIVISION

DATE
PAGE NO. 10

SAMPLE PROBLEM FOR A 2 SPAN COMPOSITE STEEL GIRDER BRIDGE LL

INFLUENCE LINES

LOAD POINTS	M 1.6	M 1.7	M 1.8	M 1.9	M 2.0L	V 2.0L	R 2.0
1.1	0.0	0.0	0.0	0.0	-0.025786	-0.125786	0.152970
1.2	0.0	0.0	0.0	0.0	-0.050064	-0.250064	0.302841
1.3	0.0	0.0	0.0	0.0	-0.071326	-0.371325	0.446516
1.4	0.0	0.0	0.0	0.0	-0.088062	-0.488062	0.580896
1.5	0.0	0.0	0.0	0.0	-0.098765	-0.598765	0.702882
1.6	0.0	0.0	0.0	0.0	-0.101927	-0.701927	0.809377
1.7	0.0	0.0	0.0	0.0	-0.096039	-0.796030	0.897281
1.8	0.0	0.0	0.0	0.0	-0.078532	-0.878531	0.961319
1.9	0.0	0.0	0.0	0.0	-0.045990	-0.945990	0.994471
2.1	0.0	0.0	0.0	0.0	-0.041068	-0.041068	0.984362
2.2	0.0	0.0	0.0	0.0	-0.070239	-0.070239	0.944284
2.3	0.0	0.0	0.0	0.0	-0.086036	-0.086036	0.876734
2.4	0.0	0.0	0.0	0.0	-0.091389	-0.091389	0.787730
2.5	0.0	0.0	0.0	0.0	-0.088599	-0.088599	0.681999
2.6	0.0	0.0	0.0	0.0	-0.079022	-0.079022	0.562327
2.7	0.0	0.0	0.0	0.0	-0.064017	-0.064017	0.431504
2.8	0.0	0.0	0.0	0.0	-0.044940	-0.044940	0.292316
2.9	0.0	0.0	0.0	0.0	-0.023149	-0.023149	0.147552
AREA 1=	0.0	0.0	0.0	0.0	-0.065649	-0.565648	0.634855
AREA 2=	0.0	0.0	0.0	0.0	-0.055821	-0.055821	0.588966
SUM - =	0.0	0.0	0.0	0.0	-0.121470	-0.621470	0.0
SUM + =	0.0	0.0	0.0	0.0	0.0	0.0	1.223821
SUM TOT	0.0	0.0	0.0	0.0	-0.121470	-0.621470	1.223821

WYOMING HIGHWAY DEPARTMENT
BRIDGE DESIGN DIVISION

DATE
PAGE NO. 11

SAMPLE PROBLEM FOR A 2 SPAN COMPOSITE STEEL GIRDER BRIDGE LL

LOAD POINTS	V 2.OR	M 2.OR	INFLUENCE LINES M 2.1	M 2.2	M 2.3	M 2.4	M 2.5
1.1	0.027184	-0.025786	0.0	0.0	0.0	0.0	-0.012893
1.2	0.052777	-0.050064	0.0	0.0	0.0	0.0	-0.025032
1.3	0.075190	-0.071326	0.0	0.0	0.0	0.0	-0.035663
1.4	0.092834	-0.088062	0.0	0.0	0.0	0.0	-0.044031
1.5	0.104117	-0.098765	0.0	0.0	0.0	0.0	-0.049383
1.6	0.107450	-0.101927	0.0	0.0	0.0	0.0	-0.050963
1.7	0.101243	-0.096039	0.0	0.0	0.0	0.0	-0.048019
1.8	0.082787	-0.078532	0.0	0.0	0.0	0.0	-0.039266
1.9	0.048482	-0.045990	0.0	0.0	0.0	0.0	-0.022995
2.1	0.943294	-0.041068	0.0	0.0	0.0	0.0	0.026896
2.2	0.874045	-0.070239	0.0	0.0	0.0	0.0	0.059740
2.3	0.790698	-0.086036	0.0	0.0	0.0	0.0	0.099272
2.4	0.696341	-0.091389	0.0	0.0	0.0	0.0	0.144025
2.5	0.593400	-0.088599	0.0	0.0	0.0	0.0	0.192850
2.6	0.483305	-0.079022	0.0	0.0	0.0	0.0	0.150208
2.7	0.367486	-0.064017	0.0	0.0	0.0	0.0	0.110281
2.8	0.247376	-0.044940	0.0	0.0	0.0	0.0	0.072390
2.9	0.124403	-0.023149	0.0	0.0	0.0	0.0	0.035856
AREA 1=	0.069206	-0.065649	0.0	0.0	0.0	0.0	-0.032825
AREA 2=	0.533145	-0.055821	0.0	0.0	0.0	0.0	0.084569
SUM - =	0.0	-0.121470	0.0	0.0	0.0	0.0	-0.032825
SUM + =	0.602351	0.0	0.0	0.0	0.0	0.0	0.084569
SUM TOT	0.602351	-0.121470	0.0	0.0	0.0	0.0	0.051745

WYOMING HIGHWAY DEPARTMENT
BRIDGE DESIGN DIVISION

DATE
PAGE NO. 12

SAMPLE PROBLEM FOR A 2 SPAN COMPOSITE STEEL GIRDER BRIDGE LL

INFLUENCE LINES

LOAD POINTS	M 2.6	M 2.7	M 2.8	M 2.9	M 3.0L	V 3.0L	R 3.0
1.1	0.0	0.0	0.0	0.0	-0.000000	0.027184	-0.027184
1.2	0.0	0.0	0.0	0.0	-0.000000	0.052777	-0.052777
1.3	0.0	0.0	0.0	0.0	-0.000000	0.075190	-0.075190
1.4	0.0	0.0	0.0	0.0	0.000000	0.092834	-0.092834
1.5	0.0	0.0	0.0	0.0	0.000000	0.104117	-0.104117
1.6	0.0	0.0	0.0	0.0	0.000000	0.107450	-0.107450
1.7	0.0	0.0	0.0	0.0	0.000000	0.101243	-0.101243
1.8	0.0	0.0	0.0	0.0	0.000000	0.082787	-0.082787
1.9	0.0	0.0	0.0	0.0	0.000000	0.048482	-0.048482
2.1	0.0	0.0	0.0	0.0	-0.000000	-0.056706	0.056706
2.2	0.0	0.0	0.0	0.0	-0.000000	-0.125955	0.125955
2.3	0.0	0.0	0.0	0.0	-0.000000	-0.209302	0.209302
2.4	0.0	0.0	0.0	0.0	-0.000000	-0.303659	0.303659
2.5	0.0	0.0	0.0	0.0	-0.000000	-0.406600	0.406600
2.6	0.0	0.0	0.0	0.0	-0.000000	-0.516695	0.516695
2.7	0.0	0.0	0.0	0.0	-0.000000	-0.632514	0.632514
2.8	0.0	0.0	0.0	0.0	-0.000000	-0.752624	0.752624
2.9	0.0	0.0	0.0	0.0	-0.000000	-0.875597	0.875597
AREA 1=	0.0	0.0	0.0	0.0	0.000000	0.069206	-0.069206
AREA 2=	0.0	0.0	0.0	0.0	-0.000000	-0.415453	0.415453
SUM - =	0.0	0.0	0.0	0.0	-0.000000	-0.415453	0.415453
SUM + =	0.0	0.0	0.0	0.0	0.000000	0.069206	-0.069206
SUM TOT	0.0	0.0	0.0	0.0	-0.000000	-0.346246	0.346246

NOW CALLING 1BRSYS00

SAMPLE PROBLEM FOR A 2 SPAN COMPOSITE STEEL GIRDER BRIDGE LL
INPUT AS RECEIVED BY COMPUTER

WORK CODE	DATA CODE	ENTRY 1	ENTRY 2	ENTRY 3	ENTRY 4	ENTRY 5	ENTRY 6
DC	2	1011111.00000	1.97000	100.00000	0.0	0.0	0.0
	201	0.0	0.0	29000.00000	0.0	0.0	0.0
	301	13.00000	4.00000	14.00000	16.00000	14.00000	16.0000
	302	30.00000	0.0	0.0	0.0	0.0	0.0
	309	0.32000	9.00000	13.00000	0.0	0.0	0.0
DC	5	10.00000	0.0	2.00000	0.0	0.0	0.0

NO DEAD LOAD CARDS READ
NOW CALLING 1BRSYS31

NOW CALLING 1BRSYS24

NOW CALLING 1BRSYS32

NOW CALLING 1BRSYS22

SAMPLE PROBLEM FOR A 2 SPAN COMPOSITE STEEL GIRDER BRIDGE LL

** GIRDER MOMENTS, SHEARS, AND REACTIONS **

SPAN LENGTH OF NO. 1=214.00 FT

GIRDER WEIGHT= 0.0 KIPS/FT SUPERIMPOSED DEAD LOAD= 0.0 KIPS/FT E(MODULUS)= 29000 KIPS/SQ

LIVE LOAD WHEEL FRACTION= 1.97

	DEAD LOAD GIRDER			SUPERIMPOSED DEAD LOAD				POINT LOADING		
POINT	REACTION	SHEAR	MOMENT	REACTION	SHEAR	MOMENT	LOADING	REACTION	SHEAR	MOMEN
1.0R	0.0	0.0	0.0	0.0	0.0	0.0		0.0	0.0	0.0
1.1		0.0	0.0		0.0	0.0			0.0	0.0
1.2		0.0	0.0		0.0	0.0			0.0	0.0
1.3		0.0	0.0		0.0	0.0			0.0	0.0
1.4		0.0	0.0		0.0	0.0			0.0	0.0
1.5		0.0	0.0		0.0	0.0			0.0	0.0
1.6		0.0	0.0		0.0	0.0			0.0	0.0
1.7		0.0	0.0		0.0	0.0			0.0	0.0
1.8		0.0	0.0		0.0	0.0			0.0	0.0
1.9		0.0	0.0		0.0	0.0			0.0	0.0
2.0L	0.0	0.0	0.0	0.0	0.0	0.0		0.0	0.0	0.0

	TRUCK LOAD 1				TRUCK LOAD 2				TRUCK LOAD 3			
POINT	REACTION	SHEAR	+MOMENT	-MOMENT	REACTION	SHEAR	+MOMENT	-MOMENT	REACTION	SHEAR	+MOMENT	-MOMEN
1.0R	0.0	0.0	0.0	0.0	0.0	0.0	0.0	0.0	0.0	0.0	0.0	0.0
1.1		0.0	0.0	0.0		0.0	0.0	0.0		0.0	0.0	0.0
1.2		0.0	0.0	0.0		0.0	0.0	0.0		0.0	0.0	0.0
1.3		0.0	0.0	0.0		0.0	0.0	0.0		0.0	0.0	0.0
1.4		37.753	3274.5	-627.81		20.362	3997.0	-898.85		0.0	0.0	0.0
1.5		0.0	0.0	0.0		0.0	0.0	0.0		0.0	0.0	0.0
1.6		0.0	0.0	0.0		0.0	0.0	0.0		0.0	0.0	0.0
1.7		0.0	0.0	0.0		0.0	0.0	0.0		0.0	0.0	0.0
1.8		0.0	0.0	0.0		0.0	0.0	0.0		0.0	0.0	0.0
1.9		0.0	0.0	0.0		0.0	0.0	0.0		0.0	0.0	0.0
2.0L	81.152	-79.426	0.0	-1755.34	218.838	-125.593	0.0	-4876.02	0.0	0.0	0.0	0.0

NOTE. -MOMENT IS A MOMENT THAT CAUSES TENSION ON THE OUTSIDE OF THE STRUCTURE

SAMPLE PROBLEM FOR A 2 SPAN COMPOSITE STEEL GIRDER BRIDGE LL
** GIRDER MOMENTS, SHEARS, AND REACTIONS **

SPAN LENGTH OF NO. 2=203.00 FT
GIRDER WEIGHT= 0.0 KIPS/FT SUPERIMPOSED DEAD LOAD= 0.0 KIPS/FT E(MODULUS)= 29000 KIPS/SQ
LIVE LOAD WHEEL FRACTION= 1.97

	DEAD LOAD GIRDER			SUPERIMPOSED DEAD LOAD			POINT LOADING			
POINT	REACTION	SHEAR	MOMENT	REACTION	SHEAR	MOMENT	LOADING	REACTION	SHEAR	MOMEN
2.0R	0.0	0.0	0.0	0.0	0.0	0.0		0.0	0.0	0.0
2.1		0.0	0.0		0.0	0.0			0.0	0.0
2.2		0.0	0.0		0.0	0.0			0.0	0.0
2.3		0.0	0.0		0.0	0.0			0.0	0.0
2.4		0.0	0.0		0.0	0.0			0.0	0.0
2.5		0.0	0.0		0.0	0.0			0.0	0.0
2.6		0.0	0.0		0.0	0.0			0.0	0.0
2.7		0.0	0.0		0.0	0.0			0.0	0.0
2.8		0.0	0.0		0.0	0.0			0.0	0.0
2.9		0.0	0.0		0.0	0.0			0.0	0.0
3.0L	0.0	0.0	0.0	0.0	0.0	0.0		0.0	0.0	0.0

	TRUCK LOAD 1				TRUCK LOAD 2				TRUCK LOAD 3			
POINT	REACTION	SHEAR	+MOMENT	-MOMENT	REACTION	SHEAR	+MOMENT	-MOMENT	REACTION	SHEAR	+MOMENT	-MOMEN
2.0R	81.502	79.557	0.0	-1755.34	219.782	123.162	0.0	-4876.02	0.0	0.0	0.0	0.0
2.1		0.0	0.0	0.0		0.0	0.0	0.0		0.0	0.0	0.0
2.2		0.0	0.0	0.0		0.0	0.0	0.0		0.0	0.0	0.0
2.3		0.0	0.0	0.0		0.0	0.0	0.0		0.0	0.0	0.0
2.4		0.0	0.0	0.0		0.0	0.0	0.0		0.0	0.0	0.0
2.5		44.342	3079.0	-877.67		37.918	3656.9	-1312.07		0.0	0.0	0.0
2.6		0.0	0.0	0.0		0.0	0.0	0.0		0.0	0.0	0.0
2.7		0.0	0.0	0.0		0.0	0.0	0.0		0.0	0.0	0.0
2.8		0.0	0.0	0.0		0.0	0.0	0.0		0.0	0.0	0.0
2.9		0.0	0.0	0.0		0.0	0.0	0.0		0.0	0.0	0.0
3.0L	0.0	0.0	0.0	0.0	0.0	0.0	0.0	0.0	0.0	0.0	0.0	0.0

NOTE. -MOMENT IS A MOMENT THAT CAUSES TENSION ON THE OUTSIDE OF THE STRUCTURE

SAMPLE PROBLEM FOR A 2 SPAN COMPOSITE STEEL GIRDER BRIDGE LL

** MAXIMUM MOMENTS, SHEARS, REACTIONS, & DEFLECTIONS **

SPAN LENGTH OF NO. 1=214.00 FT

GIRDER WEIGHT= 0.0 KIPS/FT SUPERIMPOSED DEAD LOAD= 0.0 KIPS/FT E(MODULUS)= 29000 KIPS/SQ

DESIGN VALUES

	1.0R	1.1	1.2	1.3	1.4	1.5	1.6	1.7	1.8	1.9	2.
REACTION	0.0										219
SHEAR	0.0	0.0	0.0	0.0	37.8	0.0	0.0	0.0	0.0	0.0	-125
+MOMENTS	0.0	0.0	0.0	0.0	3997.0	0.0	0.0	0.0	0.0	0.0	0
-MOMENTS	0.0	0.0	0.0	0.0	-898.9	0.0	0.0	0.0	0.0	0.0	-4876

DEFLECTIONS (MAX. ALLOWABLE LIVE LOAD DEF.=L/800= 0.2675 FT

		1.0R	1.1	1.2	1.3	1.4	1.5	1.6	1.7	1.8	1.9	2.
DEAD	DEC	0.0	0.0	0.0	0.0	0.0	0.0	0.0	0.0	0.0	0.0	0.
	FT											
LOAD	FRA	0 0	0 0	0 0	0 0	0 0	0 0	0 0	0 0	0 0	0 0	0
	IN	16	16	16	16	16	16	16	16	16	16	
TRUCK	FT	0.0	0.012	0.025	0.037	0.047	0.041	0.033	0.024	0.016	0.007	0.
LANELOAD		0.0	0.015	0.030	0.045	0.057	0.050	0.040	0.029	0.019	0.009	0.
MILITARY		0.0	0.0	0.0	0.0	0.0	0.0	0.0	0.0	0.0	0.0	0.

SPAN LENGTH OF NO. 2=203.00 FT

GIRDER WEIGHT= 0.0 KIPS/FT SUPERIMPOSED DEAD LOAD= 0.0 KIPS/FT E(MODULUS)= 29000 KIPS/SQ

DESIGN VALUES

	2.0R	2.1	2.2	2.3	2.4	2.5	2.6	2.7	2.8	2.9	3.
REACTION	219.8										0
SHEAR	123.2	0.0	0.0	0.0	0.0	44.3	0.0	0.0	0.0	0.0	0
+MOMENTS	0.0	0.0	0.0	0.0	0.0	3656.9	0.0	0.0	0.0	0.0	0
-MOMENTS	-4876.0	0.0	0.0	0.0	0.0	-1312.1	0.0	0.0	0.0	0.0	0

DEFLECTIONS (MAX. ALLOWABLE LIVE LOAD DEF.=L/800= 0.2537 FT

		2.0R	2.1	2.2	2.3	2.4	2.5	2.6	2.7	2.8	2.9	3.
DEAD	DEC	0.0	0.0	0.0	0.0	0.0	0.0	0.0	0.0	0.0	0.0	0.
	FT											
LOAD	FRA	0 0	0 0	0 0	0 0	0 0	0 0	0 0	0 0	0 0	0 0	0
	IN	16	16	16	16	16	16	16	16	16	16	
TRUCK	FT	0.0	0.008	0.017	0.026	0.035	0.042	0.035	0.026	0.018	0.009	0.
LANELOAD		0.0	0.009	0.020	0.031	0.041	0.049	0.042	0.031	0.021	0.010	0.
MILITARY		0.0	0.0	0.0	0.0	0.0	0.0	0.0	0.0	0.0	0.0	0.

NOTE. -MOMENT IS A MOMENT THAT CAUSES TENSION ON THE OUTSIDE OF THE STRUCTURE

NOW CALLING 1BRSYS33

WYOMING HIGHWAY DEPARTMENT
BRIDGE DIVISION
DEFLECTIONS INFLUENCE LINES

DATE
PAGE NO. 16

SAMPLE PROBLEM FOR A 2 SPAN COMPOSITE STEEL GIRDER BRIDGE LL

LOAD POINTS	DEF@ 1.1	DEF@ 1.2	DEF@ 1.3	DEF@ 1.4	DEF@ 1.5
1.1	0.000485	0.000970	0.001454	0.001837	0.001609
1.2	0.000976	0.001951	0.002927	0.003698	0.003238
1.3	0.001479	0.002958	0.004437	0.005606	0.004910
1.4	0.002001	0.004002	0.006003	0.007584	0.006645
1.5	0.001563	0.003127	0.004690	0.005924	0.005183
1.6	0.001157	0.002313	0.003470	0.004382	0.003827
1.7	0.000787	0.001574	0.002361	0.002981	0.002597
1.8	0.000465	0.000930	0.001395	0.001761	0.001528
1.9	0.000205	0.000410	0.000615	0.000776	0.000670
AREA 1	0.000912	0.001823	0.002735	0.003455	0.003021

	DEF@ 1.6	DEF@ 1.7	DEF@ 1.8	DEF@ 1.9		UNIT MOM. 1.OR	UNIT MOM. 2.OL
1.1	0.001278	0.000948	0.000618	0.000287	DEF@ 1.1	0.000220	0.000132
1.2	0.002574	0.001910	0.001245	0.000581	DEF@ 1.2	0.000371	0.000255
1.3	0.003904	0.002898	0.001892	0.000886	DEF@ 1.3	0.000460	0.000364
1.4	0.005287	0.003928	0.002570	0.001211	DEF@ 1.4	0.000496	0.000449
1.5	0.004114	0.003044	0.001974	0.000904	DEF@ 1.5	0.000486	0.000504
1.6	0.003027	0.002228	0.001428	0.000629	DEF@ 1.6	0.000438	0.000521
1.7	0.002045	0.001494	0.000942	0.000391	DEF@ 1.7	0.000359	0.000491
1.8	0.001196	0.000864	0.000532	0.000200	DEF@ 1.8	0.000255	0.000403
1.9	0.000521	0.000371	0.000222	0.000072	DEF@ 1.9	0.000132	0.000236
AREA 1	0.002395	0.001769	0.001142	0.000516			

WYOMING HIGHWAY DEPARTMENT
BRIDGE DIVISION
DEFLECTIONS INFLUENCE LINES

DATE
PAGE NO. 17

SAMPLE PROBLEM FOR A 2 SPAN COMPOSITE STEEL GIRDER BRIDGE LL

LOAD POINTS	DEF@ 2.1	DEF@ 2.2	DEF@ 2.3	DEF@ 2.4	DEF@ 2.5
2.1	0.000144	0.000348	0.000553	0.000757	0.000912
2.2	0.000347	0.000798	0.001250	0.001701	0.002042
2.3	0.000618	0.001363	0.002109	0.002854	0.003417
2.4	0.000941	0.002017	0.003094	0.004171	0.004982
2.5	0.001305	0.002741	0.004178	0.005615	0.006696
2.6	0.001003	0.002123	0.003244	0.004364	0.005208
2.7	0.000728	0.001552	0.002375	0.003199	0.003819
2.8	0.000474	0.001015	0.001556	0.002097	0.002505
2.9	0.000234	0.000502	0.000770	0.001038	0.001240
AREA 2	0.000549	0.001182	0.001815	0.002447	0.002924

	DEF@ 2.6	DEF@ 2.7	DEF@ 2.8	DEF@ 2.9		UNIT MOM. 2.0R	UNIT MOM. 3.0L
2.1	0.000770	0.000577	0.000385	0.000192	DEF@ 2.1	0.000211	0.000118
2.2	0.001722	0.001292	0.000861	0.000431	DEF@ 2.2	0.000361	0.000229
2.3	0.002880	0.002160	0.001440	0.000720	DEF@ 2.3	0.000440	0.000323
2.4	0.004198	0.003148	0.002099	0.001049	DEF@ 2.4	0.000467	0.000394
2.5	0.005641	0.004231	0.002821	0.001410	DEF@ 2.5	0.000452	0.000437
2.6	0.004388	0.003291	0.002194	0.001097	DEF@ 2.6	0.000403	0.000447
2.7	0.003218	0.002413	0.001609	0.000804	DEF@ 2.7	0.000327	0.000414
2.8	0.002111	0.001583	0.001055	0.000528	DEF@ 2.8	0.000229	0.000334
2.9	0.001045	0.000784	0.000522	0.000261	DEF@ 2.9	0.000118	0.000198
AREA 2	0.002464	0.001848	0.001232	0.000616			

WYOMING HIGHWAY DEPARTMENT
BRIDGE DESIGN DIVISION

DATE Q
PAGE NO 18

& S OK 0 0 &> D - C8 C 0 & 1 1 * D & 1-

WORK CODE	DATA CODE	ENTRY 1	ENTRY 2	ENTRY 3	ENTRY 4	ENTRY 5	ENTRY 6
DC	5	10.00000	0.0	2.00000	0.0	0.0	0.0 *
	501	0.0	0.0	0.40000	0.55000	0.0	0.0
	502	0.0	0.0	0.55000	0.75000	0.0	0.0
	510	1.00000	5.00000	2.00000	1.00000	0.0	0.0
	530	104.00000	4.00000	50000.00000	0.0	0.0	10.00000
	531	0.0	102.00000	0.0	0.0	1.00000	0.0
	532	0.0	0.0	0.0	0.0	0.0	0.0
	533	0.0	0.0	3250.00000	0.0	0.0	0.0
	530	110.00000	2.00000	50000.00000	0.0	0.0	0.0
	531	0.0	102.00000	0.0	0.0	1.00000	16.00000
	530	200.00000	2.00000	50000.00000	0.0	0.0	0.0
	531	0.0	102.00000	0.0	0.0	1.00000	16.00000
	530	205.00000	4.00000	50000.00000	0.0	0.0	10.00000
	531	0.0	102.00000	0.0	0.0	1.00000	0.0
	532	0.0	0.0	0.0	0.0	0.0	0.0
	533	0.0	0.0	3250.00000	0.0	0.0	0.0

4.8 MATRIX INVERSION SAMPLE PROBLEM

This sample problem illustrates the use of the matrix inversion for the solution of 'n' number of equations and 'n' number of unknowns where 'n' equals 3.

Sample Problem. Let us assume that we have a set of equations with their unknowns, coefficients of unknowns and a parameter of constants which this set of equations may be equal to.

For example:

$$3X + 4Y - 5Z = K_1$$

$$2X - 3Y + 4Z = K_2$$

$$5X + 4Y + 8Z = K_3$$

Making Matrices

$$\begin{bmatrix} 3 & 4 & -5 \\ 2 & -3 & 4 \\ 5 & 4 & 8 \end{bmatrix} \begin{bmatrix} X \\ Y \\ Z \end{bmatrix} = \begin{bmatrix} K_1 \\ K_2 \\ K_3 \end{bmatrix}$$

Where [K] can have any number of possibilities

So [A] times [X] = [K] and [X] = [K] times $[A]^{-1}$

inverting

$$\begin{array}{cccccc} 3 & 4 & -5 & 1 & 0 & 0 \\ 2 & -3 & 4 & 0 & 1 & 0 \\ 5 & 4 & 8 & 0 & 0 & 1 \end{array} = \begin{array}{cccccc} 1 & 1.333 & -1.6667 & .3333 & 0 & 0 \\ 0 & 1 & -1.2941 & .1176 & -.1764 & 0 \\ 0 & 0 & 1 & -.1050 & -.0365 & .0776 \end{array}$$

$$= \begin{array}{cccccc} 1 & 0 & 0 & .1827 & .2373 & -.0046 \\ 0 & 1 & 0 & -.0183 & -.2236 & .1004 \\ 0 & 0 & 1 & -.1050 & -.0365 & .0776 \end{array}$$

Now

$$\begin{bmatrix} X \\ Y \\ Z \end{bmatrix} = \begin{bmatrix} .1827 & .2373 & -.0046 \\ -.0183 & -.2236 & .1004 \\ -.1050 & -.0365 & .0776 \end{bmatrix} \begin{bmatrix} K_1 \\ K_2 \\ K_3 \end{bmatrix}$$

If one set of K's are -35 X = .1827(-35) + .2373(40) - .0046(23)
40 Y = -.0183(-35) - .2236(40) + .1004(23)
23 Z = -.1050(-35) - .0365(40) + .0776(23)

$\underline{X}$ = -6.3945 + 9.492 - .1058 = $\underline{2.9917}$

$\underline{Y}$ = .6405 - 8.944 + 2.3092 = $\underline{5.9943}$

$\underline{Z}$ = 3.675 - 1.46 + 1.7848 = $\underline{3.9998}$

By substitution into the original equations we see they are satisfied by the solution.

FORM C-16
Rev. 3/11/69

WYOMING STATE HIGHWAY DEPARTMENT
CHEYENNE WYOMING
BRIDGE DIVISION

SHEET NO _____ OF _____
BY _____ DATE _____
CHECKED _____

//EXEC BRSYSØØ

DESIGN SYSTEM

Employee No. 68	Dept. Code	P or D	Job Code 75	Work Code	Str. No.

65 80 64

1 COMMENT CARD

1ØØ	MATRIX INVERSION TEST CASE

1 2 WORK CODE	3 5 DATA CODE	ENTRY 1 (6–15)	ENTRY 2 (25)	ENTRY 3 (35)	ENTRY 4 (45)	ENTRY 5 (55)	ENTRY 6 (65)	66 CONT
MB	ØØ1	3.						
	1	3.	4.	-5.				
	2	2.	-3.	4.				
	3	5.	4.	8.				

TRAILER CARD

999	

1 3

NOTE: A trailer card must follow the last structure card containing data

MATRIX INVERSION TEST CASE

A(1, 1)=0.300000E 01	A(1, 2)=0.400000E 01	A(1, 3)=-.500000E 01	A(1, 4)=0.0
A(2, 1)=0.200000E 01	A(2, 2)=-.300000E 01	A(2, 3)=0.400000E 01	A(2, 4)=0.0
A(3, 1)=0.500000E 01	A(3, 2)=0.400000E 01	A(3, 3)=0.800000E 01	A(3, 4)=0.0

MATRIX INVERSION TEST CASE

```
                                  2 4                    1CT
A( 1, 1)=0.182648E 00    A( 1, 2)=0.237443E 00    A( 1, 3)=-.456621E-02    A( 1, 4)=0.0

A( 2, 1)=-.182648E-01    A( 2, 2)=-.223744E 00    A( 2, 3)=0.100457E 00    A( 2, 4)=0.0

A( 3, 1)=-.105023E 00    A( 3, 2)=-.365297E-01    A( 3, 3)=0.776255E-01    A( 3, 4)=0.0

NOW CALLING    1BRSYS00
```

TE 662 .A3
no.FHWA-RD-73-
502.
BORROW
Form DOT F 17
FORMERLY FORM

DOT LIBRARY
00054414

FHWA

R&D